Drying Tumblers

Stacked 30 Pound Capacity

Models Through Serial No. DTCK9401011756

Refer to Page 3 for Model Numbers

Parts

Alliance Laundry Systems

www.alliancelaundry.com

Part No. M411988R6
November 2012

Table of Contents

Title	Page
Parts Ordering Information	2
Serial Plate Location	2
Model Identification	3
Single Coin Drop	4
Dual Coin Drop	6
Cover Plate	8
Microprocessor	10
Front Panel Assembly - Models Through Serial No. DTCK0728885ZH	12
Front Panel Assembly - Models Starting Serial No. DTCK0728885ZH Through Serial No. DTCK9312664705	14
Side Panels	16
Loading Door	18
Lint Drawer	20
Cylinder	22
Drive Shaft - Models Through Serial No. DTCK0696605YF	24
Drive Shaft - Models Starting Serial No. DTCK0696605YF	26
Blower Housing and Fan	28
Motor and Belt Guard	30
Thermostat and Burner	32
Gas Valve - Single Input	34
Gas Valve - Dual Input Models Starting Serial No. DTCK0714594ZA Through Serial No. DTCK9211033713	36
Gas Valve - Dual Input Models Through Serial No. DTCK0714594ZA	38
Gas Valve Coils	40
Junction Box - 120 or 208-240 Volt/60 Hertz	42
Junction Box - 240 Volt/50 Hertz	44
Junction Box - 120 or 208-240 Volt/60 Hertz	46
Junction Box - 240 Volt/50 Hertz	48
Contactor Box	50
Stickers and Labels - Front of Machine	52
Stickers and Labels - Rear of Machine	54
Parts Index	57

© Copyright 2012, Alliance Laundry Systems LLC

All rights reserved. No part of the contents of this book may be reproduced or transmitted in any form or by any means without the expressed written consent of the publisher.

Parts Ordering Information

If literature or replacement parts are required, contact the source from whom the machine was purchased or contact Alliance Laundry Systems at (920) 748-3950 for the name and address of the nearest authorized parts distributor.

For technical assistance, call either of the numbers listed below:

(920) 748-3121 Ripon, Wisconsin

+32 56 41 20 54 Wevelgem, Belgium

Serial Plate Location

When calling or writing about your product, be sure to mention model and serial numbers. Model and serial numbers are located on serial plate(s) as shown.

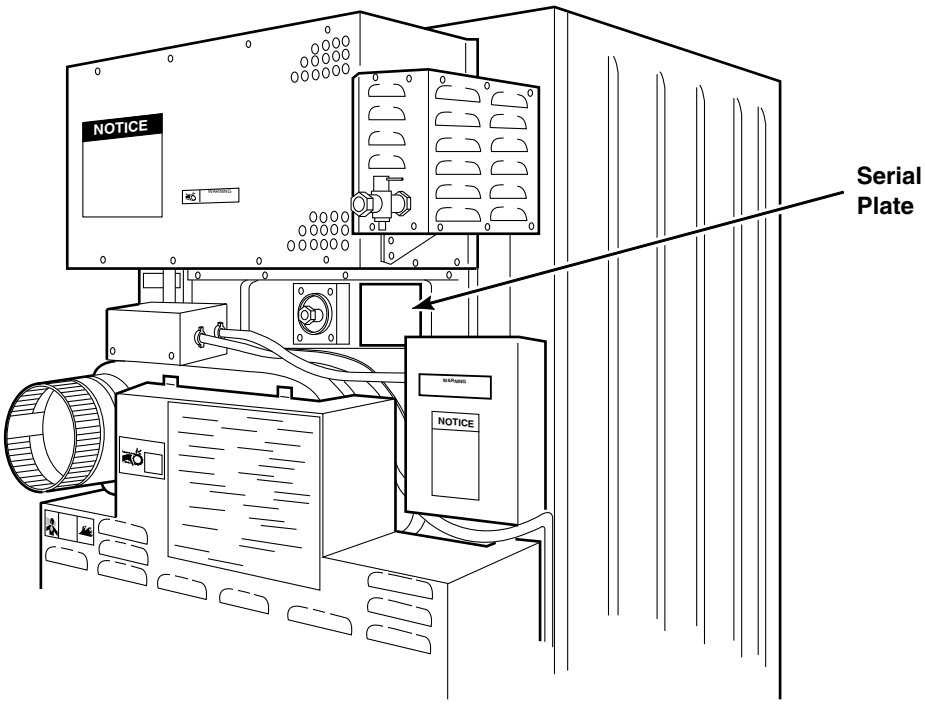

TMB2225P_M411988

© Copyright, Alliance Laundry Systems LLC – DO NOT COPY or TRANSMIT

Model Identification

Information in this manual is applicable to these stacked drying tumbler models:

JCD32DG
JTD32DG
SCD32DG
STD32DG

© Copyright, Alliance Laundry Systems LLC – DO NOT COPY or TRANSMIT

Single Coin Drop

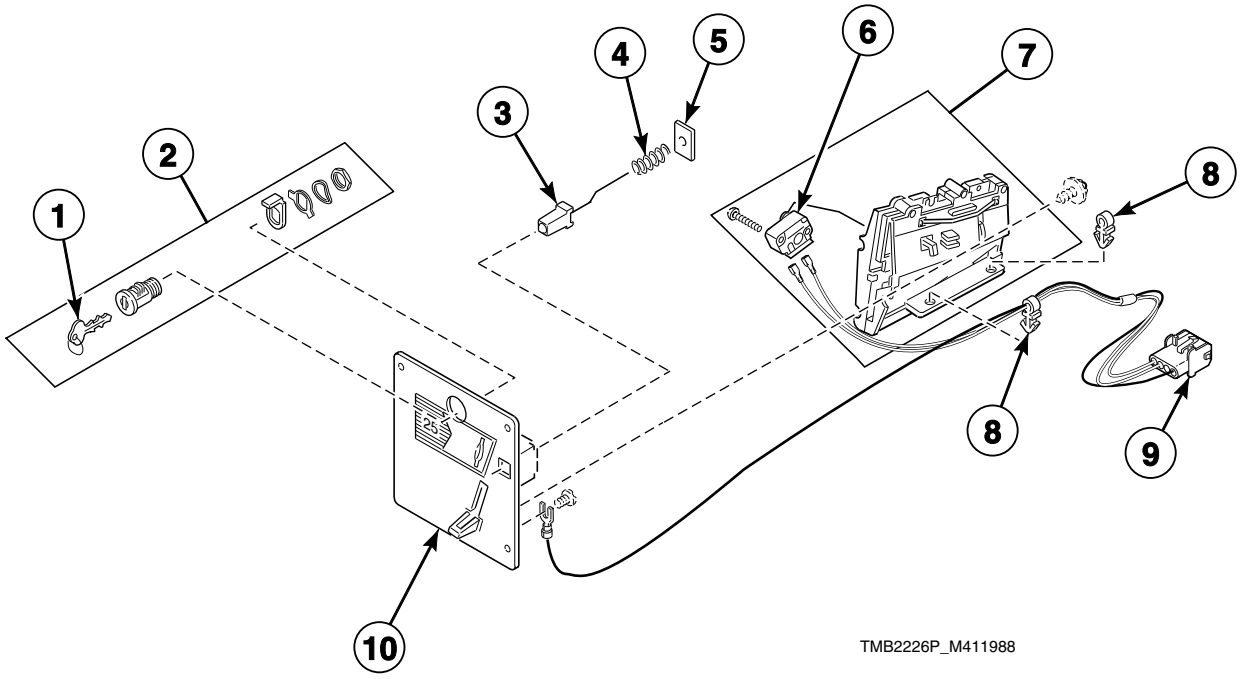

© Copyright, Alliance Laundry Systems LLC – DO NOT COPY or TRANSMIT

Single Coin Drop

REF	PART NO.	DESCRIPTION	COMMENTS
	70286101P	Coin Drop Switch	
	70379901	Control Panel Overlay	S models; Top
	70380001	Control Panel Overlay	S models; Bottom
	70380101	Control Panel Overlay	J models; Top
	70380201	Control Panel Overlay	J models; Bottom
	44089301P	Lock, Key and Nut Kit	RL001; Can be used to replace items 1 and 2
	44089302P	Lock, Key and Nut Kit	RL002; Can be used to replace items 1 and 2
1	430664	Coin Drop Key	
2	N/A	Lock and Key Assembly	
3	81312J	Reject Button	
4	N/A	Reject Button Spring	
5	N/A	Reject Button Cover Plate	
6	N/A	Coin Switch	.25
7	N/A	Rejector	.25
8	N/A	Clip	
9	N/A	Single Wire Harness Assembly	
10	431623P	Coin Drop Kit	U.S.; .25
	N/A	Coin Drop	Token; STD 118-1
	N/A	Coin Drop	Canada; .25
	N/A	Coin Drop	Japan; 100 yen
	430609	Coin Drop	France; 2 franc
	N/A	Coin Drop	Hong Kong; $5.00 piece
	N/A	Coin Drop	Token; STD 118-5
	431126	Coin Drop	Korea; 500 won
	N/A	Coin Drop	Token; STD 118-16

N/A = Part no longer available

© Copyright, Alliance Laundry Systems LLC – DO NOT COPY or TRANSMIT

Dual Coin Drop

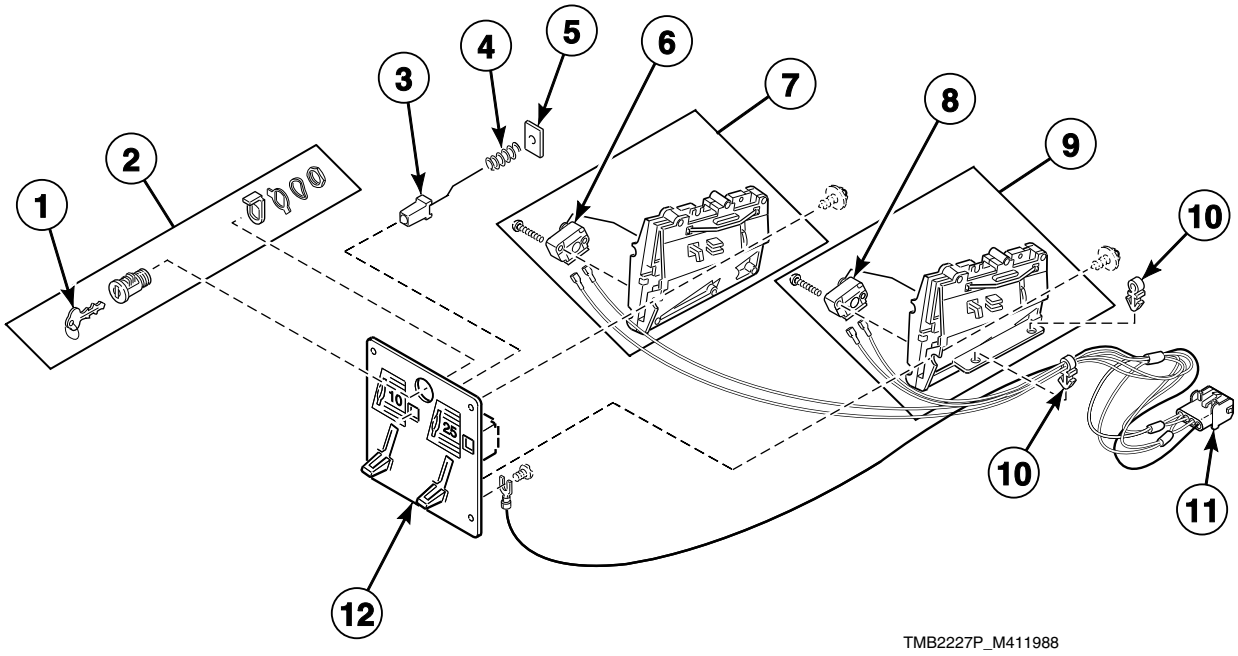

© Copyright, Alliance Laundry Systems LLC – DO NOT COPY or TRANSMIT

Dual Coin Drop

REF	PART NO.	DESCRIPTION	COMMENTS
	70379902	Overlay	S models; Top
	70380002	Overlay	S models; Bottom
	70380102	Overlay	J models; Top
	70380202	Overlay	J models; Bottom
1	430664	Coin Drop Key	
2	N/A	Lock and Key Assembly	
3	81312J	Reject Button	
4	N/A	Reject Button Spring	
5	N/A	Reject Button Cover Plate	
6	N/A	Switch	
7	N/A	Rejector	.10
8	N/A	Coin Switch	
9	N/A	Rejector	.25
10	N/A	Clip	
11	N/A	Dual Wire Harness Assembly	
12	N/A	Coin Drop	U.S.; .10 and .25
	N/A	Coin Drop	England; 20 pence and 50 pence
	44085402	Coin Drop	Australia; 1.00
	431037	Coin Drop	Belgium; 5 franc and 20 franc
	N/A	Coin Drop	Canada; .25 and 1.00

N/A = Part no longer available

© Copyright, Alliance Laundry Systems LLC – DO NOT COPY or TRANSMIT

Cover Plate

For Manual Start Kit

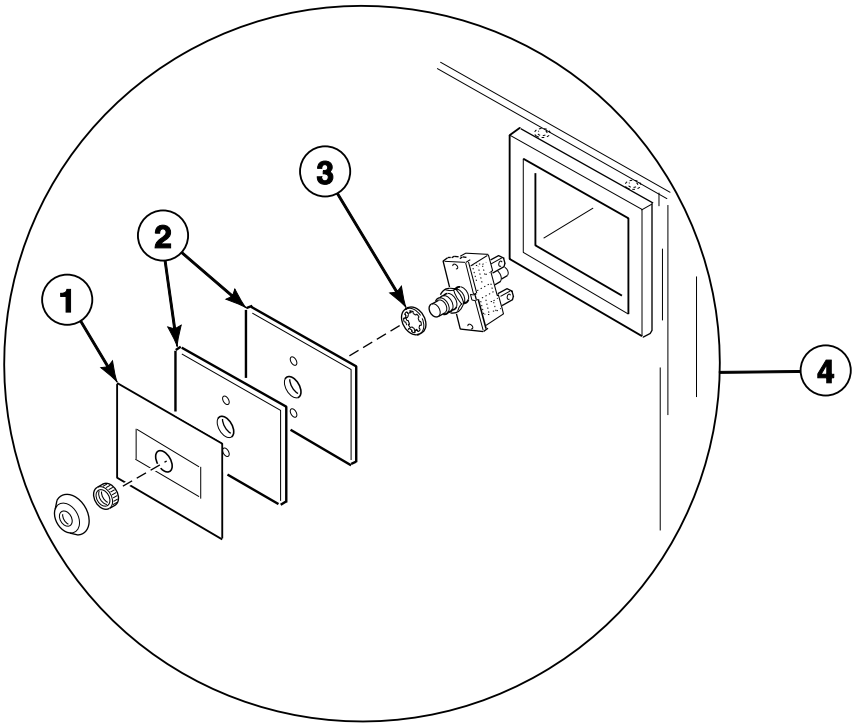

TMB2228P_M411988

© Copyright, Alliance Laundry Systems LLC – DO NOT COPY or TRANSMIT

Cover Plate

REF	PART NO.	DESCRIPTION	COMMENTS
	20275	Nut	Models through Serial No. DTCK0728885ZH
	M401930	Nut	Models starting Serial No. DTCK0728885ZH
1	N/A	Timer Switch Instruction Plate	
2	81637	Switch Plate	2 required
3	N/A	Washer	2 required
4	N/A	Microprocessor Start Assembly	

N/A = Part no longer available

NOTE: DTCK0728885ZH was Serial No. for models with angled Coin Vault located below Coin Drop. Single Coin Drops did not change with Coin Vault change.

© Copyright, Alliance Laundry Systems LLC – DO NOT COPY or TRANSMIT

Microprocessor

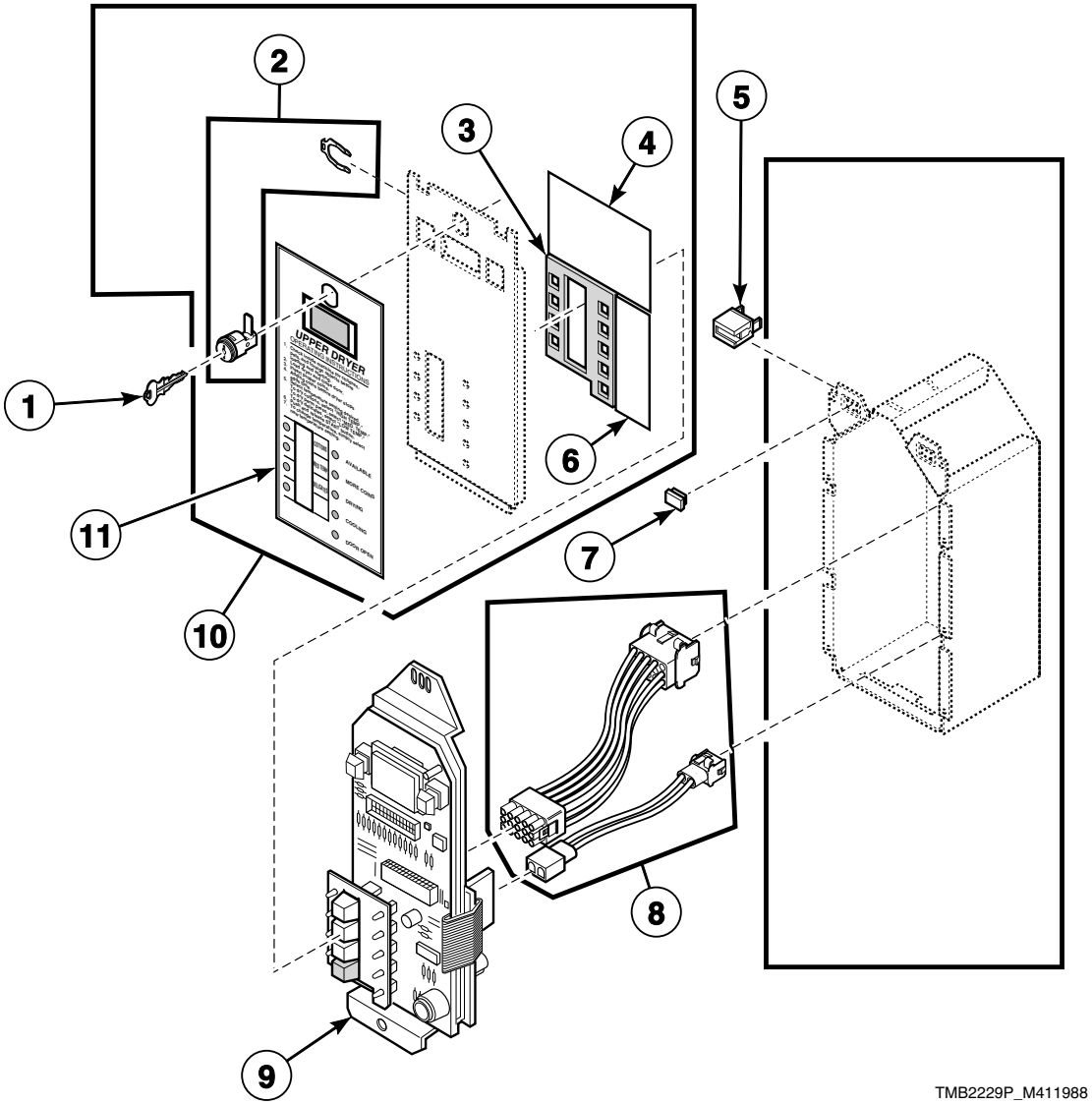

© Copyright, Alliance Laundry Systems LLC – DO NOT COPY or TRANSMIT

Microprocessor

REF	PART NO.	DESCRIPTION	COMMENTS
	44089301P	Lock, Key and Nut Kit	RL001; Can be used to replace items 1 and 2
	44089302P	Lock, Key and Nut Kit	RL002; Can be used to replace items 1 and 2
1	430664	Coin Drop Key	
2	430832P	Microprocessor Door Lock	
3	N/A	Gasket	
4	N/A	Microprocessor Programming Label	
5	N/A	Pilot Light	Models through Serial No. DTCK9211033714
6	N/A	Microprocessor Display Sticker	
7	N/A	Flat Lens	Models through Serial No. DTCK9211033714
8	430330P	Microprocessor Wire Harness Kit	
9	N/A	Microprocessor Control Assembly	
10	N/A	Microprocessor Cover Assembly	Left
	N/A	Microprocessor Cover Assembly	Right
11	430902	Door Graphics	Upper door; Models SCD32DG and STD32DG
	430904	Door Graphics	Lower door; Models SCD32DG and STD32DG
	N/A	Microprocessor Overlay	Upper; Models JCD32DG and JTD32DG
	N/A	Microprocessor Overlay	Lower; Models JCD32DG and JTD32DG

N/A = Part no longer available

© Copyright, Alliance Laundry Systems LLC – DO NOT COPY or TRANSMIT

Front Panel Assembly - Models Through Serial No. DTCK0728885ZH

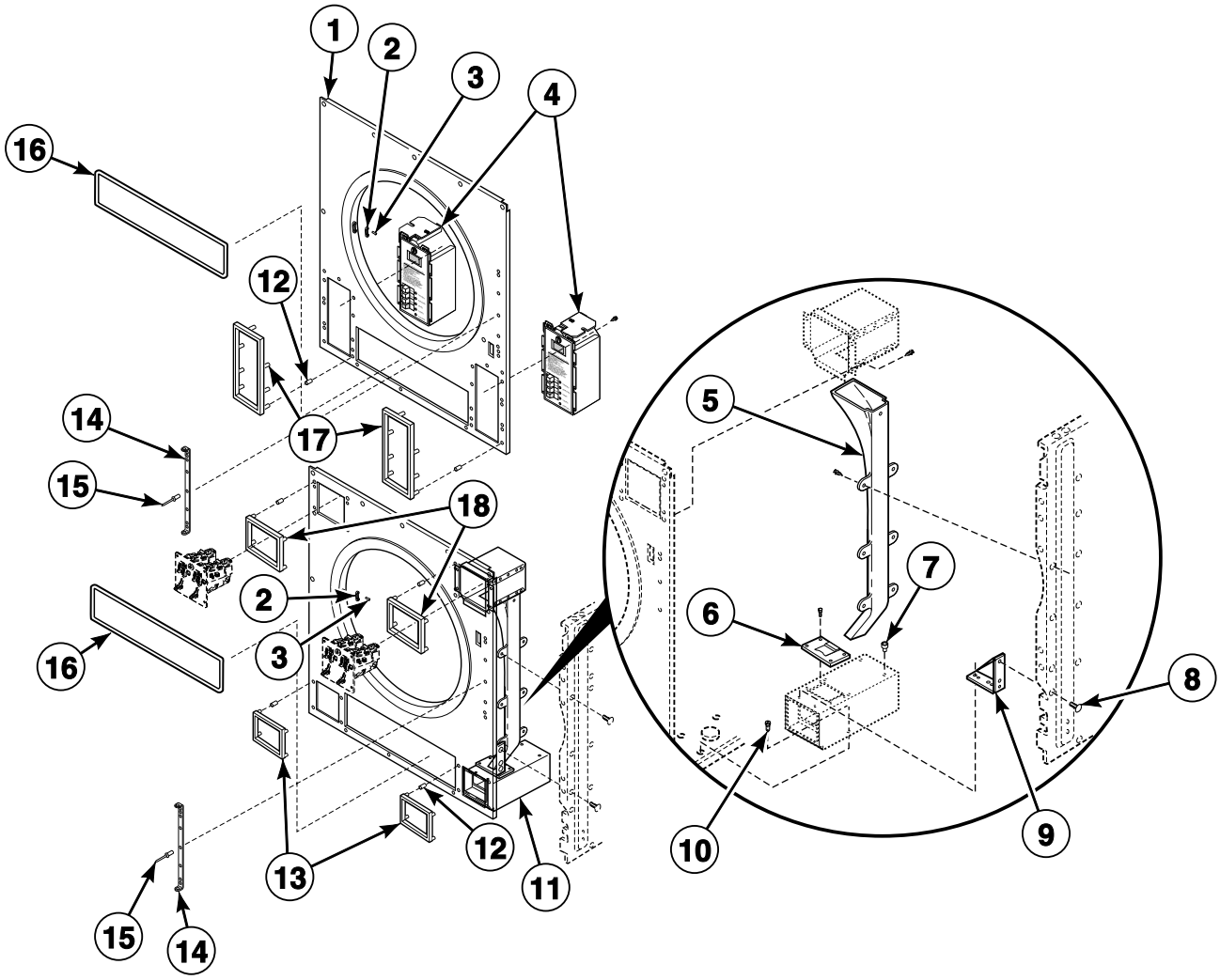

TMB2230P_M411988

© Copyright, Alliance Laundry Systems LLC – DO NOT COPY or TRANSMIT

Front Panel Assembly - Models Through Serial No. DTCK0728885ZH

REF	PART NO.	DESCRIPTION	COMMENTS
1	431323LP	Front Panel Assembly	Upper
	N/A	Front Panel Assembly	Stainless steel; Upper
2	M401223	Door Latch	Included with front panel
3	M400003	Pop Rivet	Included with front panel
4	N/A	Microprocessor Control Assembly	
5	430228	Coin Chute	
6	N/A	Coin Chute Bracket	Left
	N/A	Coin Chute Bracket	Right
7	N/A	Coin Vault Plug	
8	430489	Blind Rivet	
9	N/A	Coin Vault Gusset	
10	N/A	Screw	
11	N/A	Front Panel Assembly	Lower
	N/A	Front Panel Assembly	Stainless steel; Lower
12	M400972	Shadow Box Clip	
13	430548	Coin Vault Shadow Box	
14	431000*	Hinge Bracket	Included with front panel
	431044	Hinge Bracket	Stainless steel
15	M410762	Pop Rivet	Included with front panel
16	430638P	Lint Drawer Seal	Included with front panel
17	N/A	Microprocessor Control Shadow Box	Included with front panel
18	N/A	Coin Drop Shadow Box	

*** Add Letter To Designate Color. H - Harvest Gold L - Almond W - White**

N/A = Part no longer available

© Copyright, Alliance Laundry Systems LLC – DO NOT COPY or TRANSMIT

Front Panel Assembly - Models Starting Serial No. DTCK0728885ZH Through Serial No. DTCK9312664705

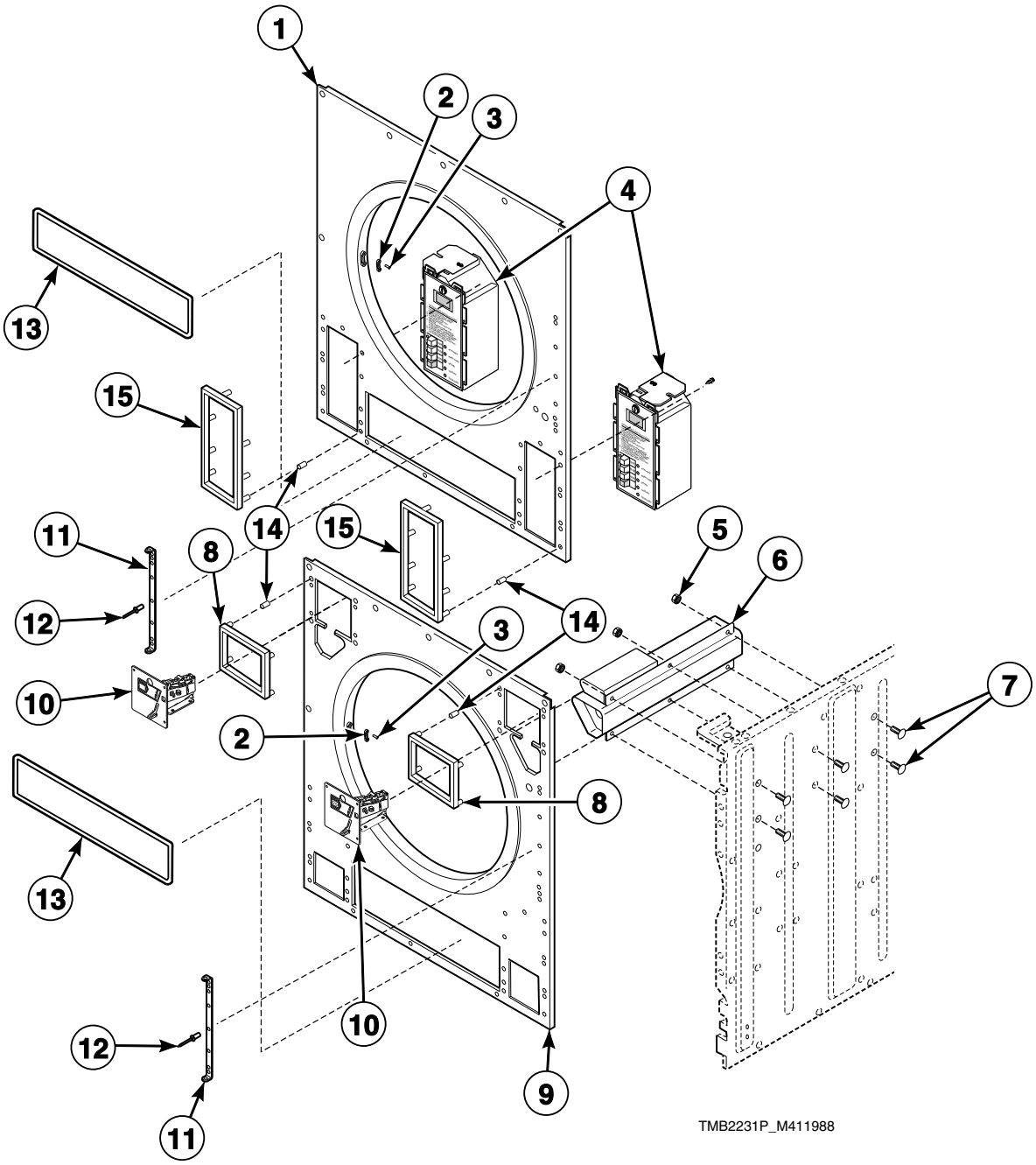

© Copyright, Alliance Laundry Systems LLC – DO NOT COPY or TRANSMIT

Front Panel Assembly - Models Starting Serial No. DTCK0728885ZH Through Serial No. DTCK9312664705

REF	PART NO.	DESCRIPTION	COMMENTS
	430987*	Coin Drawer Assembly	Left
	430977*	Coin Drawer Assembly	Right
	430843	Safety Wire Harness Assembly	Models through Serial No. DTCK9211033713
1	N/A	Front Panel Assembly	Upper
	N/A	Front Panel Assembly	Stainless steel; Upper
2	M401223	Door Latch	Included with front panel
3	M400003	Pop Rivet	Included with front panel
4	N/A	Microprocessor Control Assembly	
5	23951	Nut	6 required
6	N/A	Coin Vault Assembly	Left
	N/A	Coin Vault Assembly	Right
7	N/A	Screw	6 required
8	430548	Coin Vault Shadow Box	
9	N/A	Front Panel Assembly	Lower
	N/A	Front Panel Assembly	Stainless steel; Lower
10	N/A	Coin Drop Kit	U.S.; .25
	N/A	Coin Drop	Token; STD 118-1
	N/A	Coin Drop	Canada; .25
	N/A	Coin Drop	Japan; 100 yen
	N/A	Coin Drop	Hong Kong; $5.00 piece
	N/A	Coin Drop	Token; STD 118-15
	431126	Coin Drop	Korea; 500 won
	N/A	Coin Drop	Token; STD 118-16
11	431000*	Hinge Bracket	
	431044	Hinge Bracket	Stainless steel; included with front panel
12	M410762	Pop Rivet	Included with front panel
13	430638P	Lint Drawer Seal	Included with front panel
14	M400972	Shadow Box Clip	Included with front panel
15	N/A	Microprocessor Control Shadow Box	

*** Add Letter To Designate Color. H - Harvest Gold L - Almond W - White**

N/A = Part no longer available

© Copyright, Alliance Laundry Systems LLC – DO NOT COPY or TRANSMIT

Side Panels

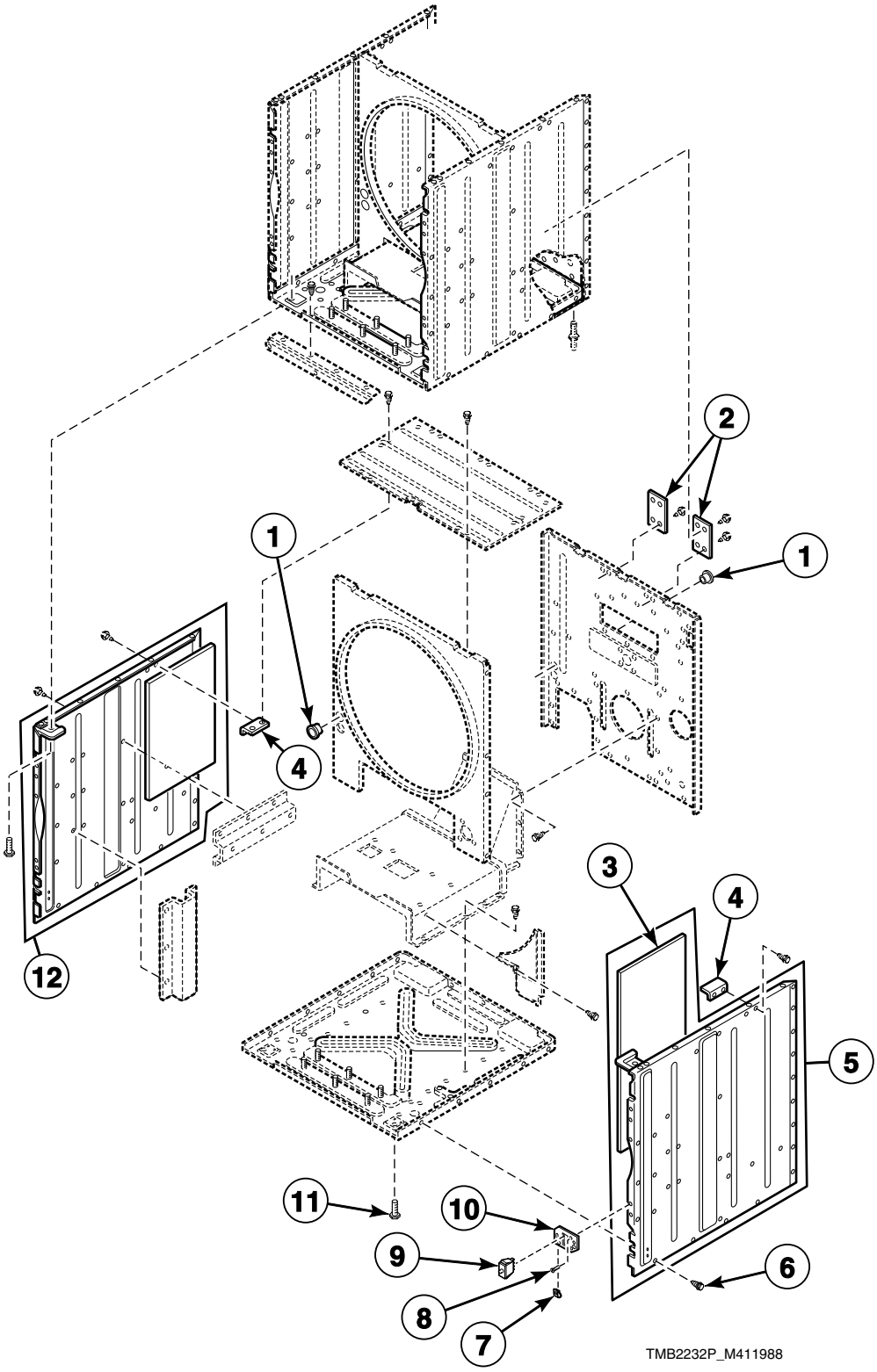

© Copyright, Alliance Laundry Systems LLC – DO NOT COPY or TRANSMIT

Side Panels

REF	PART NO.	DESCRIPTION	COMMENTS
1	M402542	Snap Bushing	
2	N/A	Cabinet Bracket	
3	N/A	Insulation	
4	N/A	Mounting Bracket	
5	N/A	Right Side Cabinet Assembly	
6	27196	Screw	
	N/A	Screw	
7	N/A	Nut	
8	28193	Screw	
9	M406103	Door Switch	Located on front panel on models through Serial No. DTCK0728885ZH
10	431118	Door Switch Bracket	
11	M400063	Screw	Leveling leg
12	N/A	Left Side Cabinet Assembly	

N/A = Part no longer available

© Copyright, Alliance Laundry Systems LLC – DO NOT COPY or TRANSMIT

Loading Door

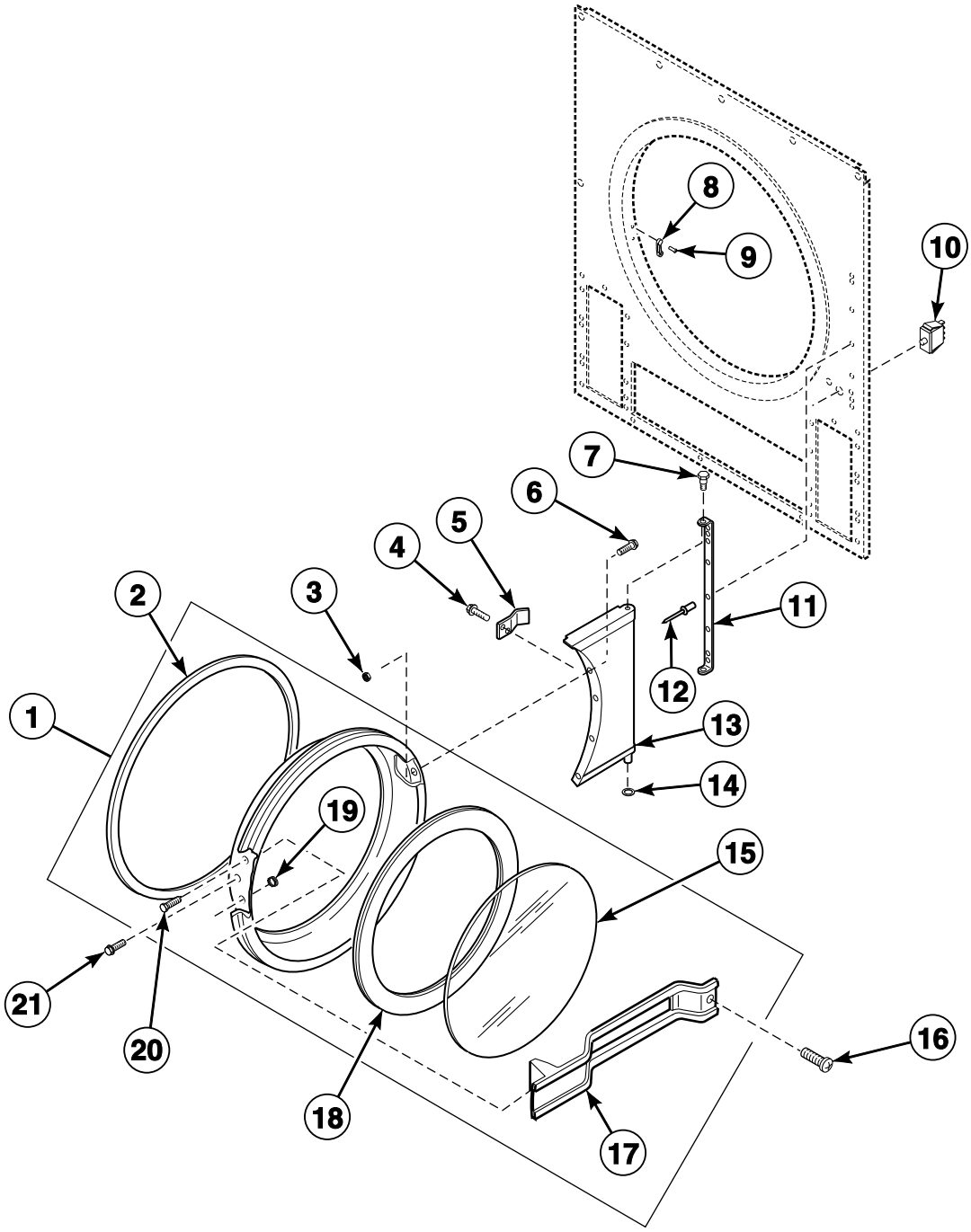

TMB2233P_M411988

© Copyright, Alliance Laundry Systems LLC – DO NOT COPY or TRANSMIT

Loading Door

REF	PART NO.	DESCRIPTION	COMMENTS
	430459	Door Handle	Models JCD32DG and JTD32DG; Crossbar
	70133501P	Replacement Door Handle Kit	
	M409385	Screw	Models JCD32DG and JTD32DG; For door handle
	M414215	Nut	Models JCD32DG and JTD32DG; For door handle
	Q6163	Nut	Models JCD32DG and JTD32DG; For door hinge
	03815	Washer	Models JCD32DG and JTD32DG; For door hinge
	M402585	Screw	
1	430476	Door Assembly	Models JCD32DG and JTD32DG; Plain
	M410887	Door Assembly	Models JCD32DG and JTD32DG; Logo
	430475	Door Assembly	Models SCD32DG and STD32DG
2	M406129	Door Ring Gasket	
3	23951	Nut	
4	430497	Screw	
5	N/A	Door Switch Tab	
6	M400044	Screw	
7	M400653	Hinge Pin	
8	M401223	Door Latch	
9	M400003	Pop Rivet	
10	M406103	Door Switch	Located on side panel on models starting Serial No. DTCK0728885ZH
11	431000*	Hinge Bracket	Painted; Included with front panel
	431044	Hinge Bracket	Stainless steel; Included with front panel
12	M410762	Pop Rivet	
13	M402714*	Door Hinge Assembly	Painted
	M400514	Hinge Assembly	Stainless steel
14	M400675	Washer	
15	M400784P	Door Glass	
	70133601P	Door Glass	Models JCD32DG and JTD32DG
16	M409385	Screw	
17	430459	Door Handle	Models JCD32DG and JTD32DG; Crossbar
	44057701	Door Handle	Models JCD32DG and JTD32DG
	430117	Door Handle	Models SCD32DG and STD32DG
18	70211901P	Door Glass Seal Kit	
19	N/A	Door Plug	
20	430756	Screw	
21	M400661	Screw	

*** Add Letter To Designate Color. H - Harvest Gold L - Almond W - White**

N/A = Part no longer available

© Copyright, Alliance Laundry Systems LLC – DO NOT COPY or TRANSMIT

Lint Drawer

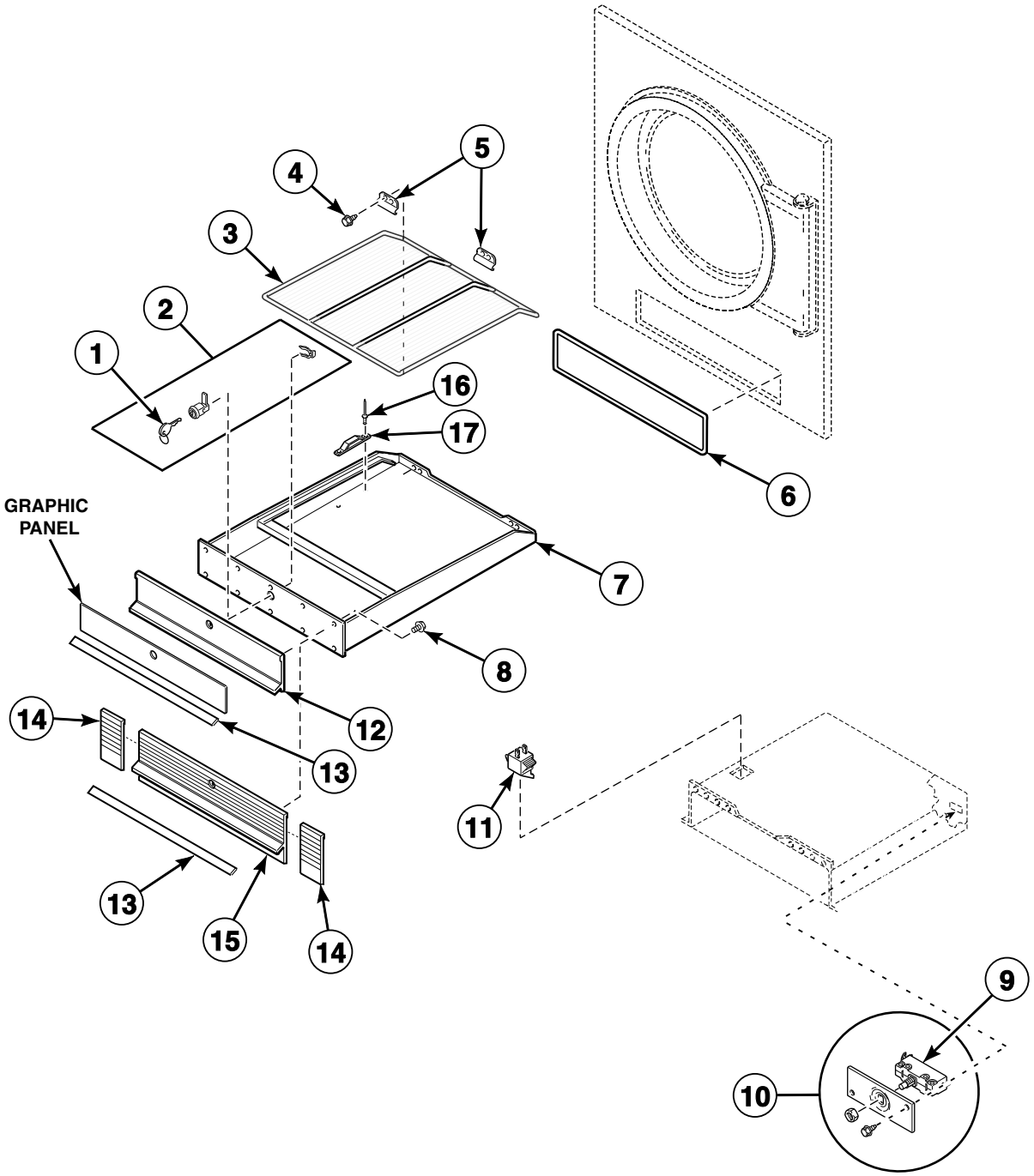

TMB2234P_M411988

© Copyright, Alliance Laundry Systems LLC – DO NOT COPY or TRANSMIT

Lint Drawer

REF	PART NO.	DESCRIPTION	COMMENTS
	430871	Lint Drawer Seal	
	44089301P	Lock, Key and Nut Kit	RL001; Can be used to replace items 1 and 2
	44089302P	Lock, Key and Nut Kit	RL002; Can be used to replace items 1 and 2
1	M401680	Panel Key	Models SCD32DG and STD32DG
	430664	Coin Drop Key	Models JCD32DG and JTD32DG
2	430429P	Lock and Key	
3	430482	Lint Screen Frame Assembly	Models through Serial No. DTCK9308000527
	431215	Lint Screen Frame Assembly	Models starting Serial No. DTCK9308000528
4	51780	Screw	
5	N/A	Lint Screen Bracket	
6	430638P	Lint Drawer Seal	Included with front panel
7	430490	Lint Drawer Assembly	Models through Serial No. DTCK9308000527
	N/A	Lint Drawer Assembly	Models starting Serial No. DTCK9308000528
8	430757	Screw	
9	N/A	Lint Drawer Switch	
10	N/A	Lint Drawer Assembly	Models through Serial No. DTCK9308000527
11	431159	Switch	Models starting Serial No. DTCK9308000528
12	N/A	Front Plate	Upper; Models SCD32DG and STD32DG
	N/A	Front Plate	Upper; Models JCD32DG and JTD32DG
13	430527	Lint Compartment Label	
14	431001	Kickplate Extension	Models starting Serial No. DTCK9308000528
15	N/A	Front Plate	Lower; Models through Serial No. DTCK9308000527
	N/A	Front Plate	Lower; Models starting Serial No. DTCK9308000528
16	430489	Blind Rivet	
17	431273	Actuator Switch Block	

N/A = Part no longer available

© Copyright, Alliance Laundry Systems LLC – DO NOT COPY or TRANSMIT

Cylinder

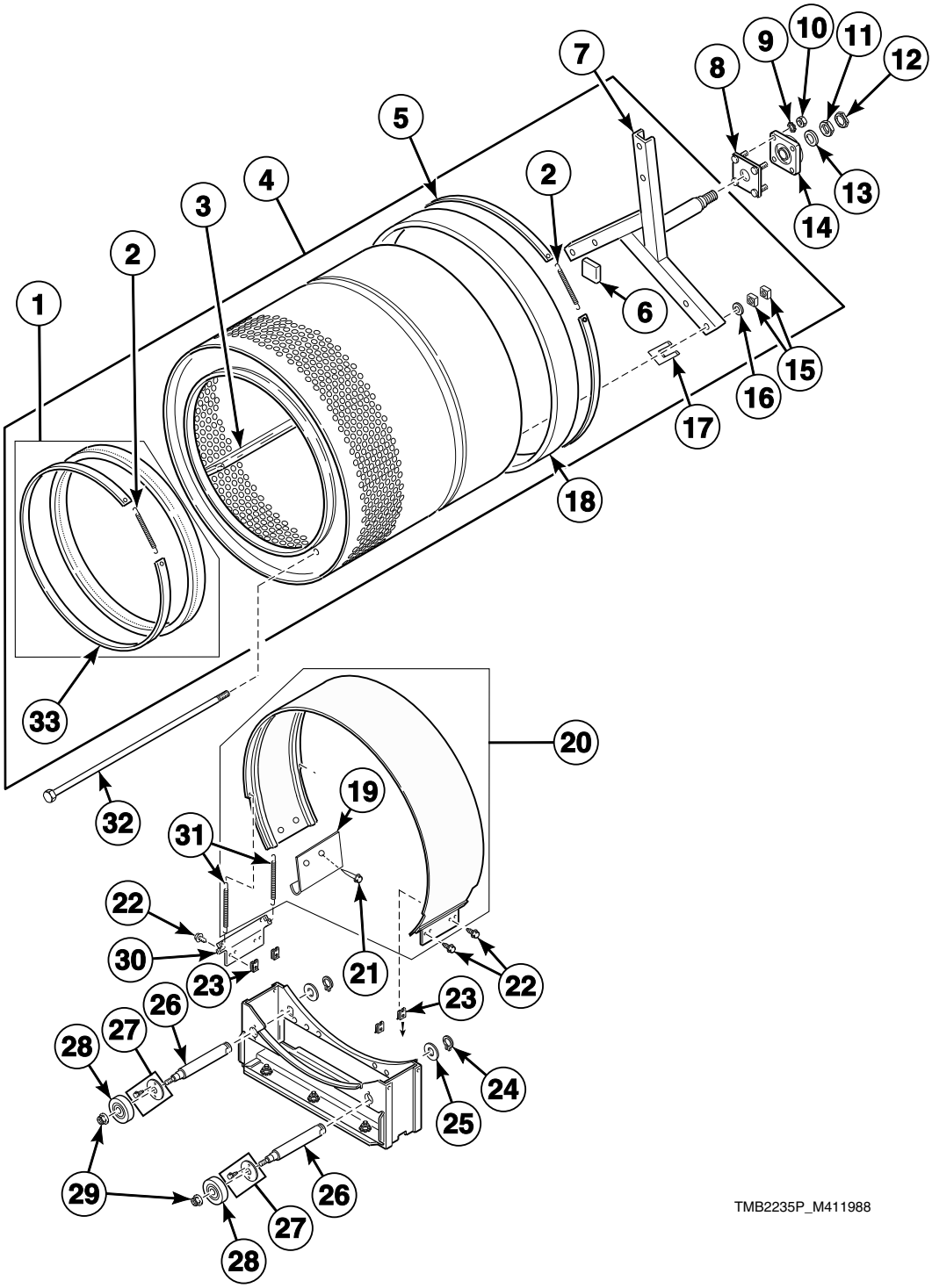

© Copyright, Alliance Laundry Systems LLC – DO NOT COPY or TRANSMIT

Cylinder

REF	PART NO.	DESCRIPTION	COMMENTS
	430821	Adhesive	Attaches felt seal to cylinder
	263P4	Cylinder Guide Tool	
	430929P	Cylinder Assembly	Trunnion not included
	430381	Lint Drawer Lock Plate	
1	430844P	Front Seal Kit	Includes strap
2	52310	Spring	
3	430099	Rib Assembly	
4	430580P	Cylinder and Trunnion Assembly	
5	430355P	Seal Strap	
6	M402144	Felt Pad	
7	430219	Trunnion Assembly	
8	430352	Cylinder Bearing Stud Plate Assembly	
9	02834	Washer	
10	02428	Nut	
11	M400022	Nut	
12	M400034	Nut	
13	M400991	Washer	
14	430260P	Support Housing Bearing Assembly	
15	M401930	Nut	
16	M401947	Washer	
17	M401402	Spacer	
18	430105P	Seal Kit	
19	N/A	Sweep Sheet Bumper Kit	
20	430884P	Sweep Sheet Kit	
21	M400003	Pop Rivet	
22	502535	Screw	
23	F430264	Nut	4 required
24	70061	Retaining Ring	2 required
25	N/A	Washer	2 required
26	431315	Roller Shaft	2 required
27	431314	Roller Shaft Retainer	2 required
28	430019	Roller Bearing Assembly	2 required
29	430576	Nut	2 required
30	431361	Bracket	Attaches to roller bracket
31	430954	Spring	
32	N/A	Cylinder Rib Rod	
33	430845P	Front Cylinder Seal Strap	

N/A = Part no longer available

© Copyright, Alliance Laundry Systems LLC – DO NOT COPY or TRANSMIT

Drive Shaft - Models Through Serial No. DTCK0696605YF

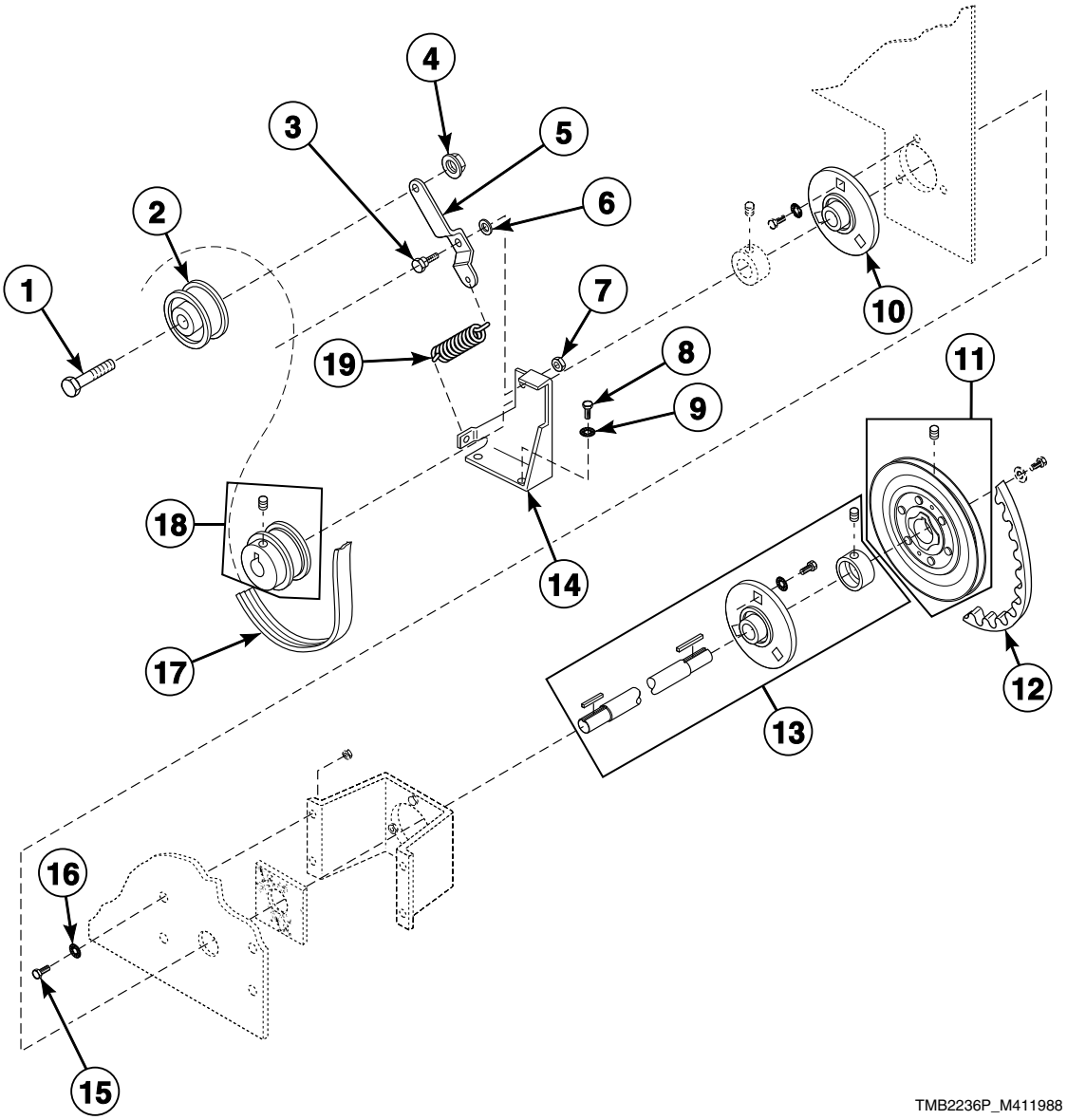

© Copyright, Alliance Laundry Systems LLC – DO NOT COPY or TRANSMIT

Drive Shaft - Models Through Serial No. DTCK0696605YF

REF	PART NO.	DESCRIPTION	COMMENTS
	27220	Screw	
	26509	Washer	
1	430648	Screw	
2	430619	Drum Idler Wheel Assembly	
3	431539	Screw	
4	56156	Nut	
5	430263	Cylinder Idler Arm	
6	430782	Washer	
7	52566	Nut	
8	02422	Screw	
9	M400017	Washer	
10	N/A	Flange Bearing	Will need to order the following items from the *Drive Shaft* section: 10, 15-19, 23, 25 and 26
11	430800P	Sheave	Steel; With set screw
12	430054	Belt	
13	N/A	Flange Bearing and Drive Shaft	Will need to order the following items from the *Drive Shaft* section: 10, 15-19, 23, 25 and 26
14	430193	Cylinder Idler Bracket	
15	M400057	Screw	
16	02834	Washer	
17	430104P	Belt	Poly-V “J”; 8 rib; 106.75 inches
18	430050P	Pulley Kit	
19	N/A	Drum Idler Spring	

N/A = Part no longer available

© Copyright, Alliance Laundry Systems LLC – DO NOT COPY or TRANSMIT

Drive Shaft - Models Starting Serial No. DTCK0696605YF

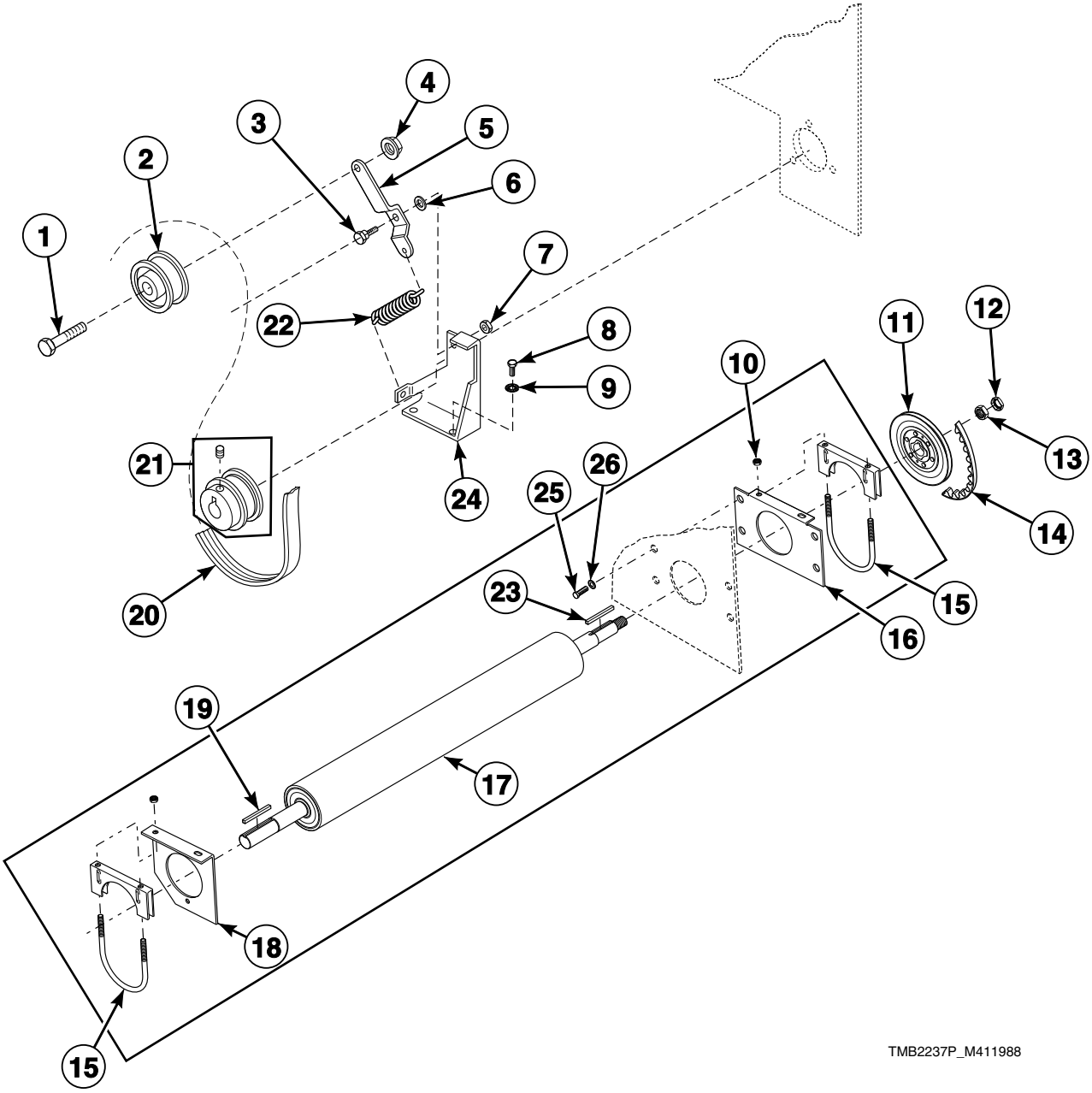

© Copyright, Alliance Laundry Systems LLC – DO NOT COPY or TRANSMIT

Drive Shaft - Models Starting Serial No. DTCK0696605YF

REF	PART NO.	DESCRIPTION	COMMENTS
1	430648	Screw	
2	430619	Drum Idler Wheel Assembly	
3	431539	Screw	
4	56156	Nut	
5	430263	Cylinder Idler Arm	
6	430782	Washer	
7	52566	Nut	
8	02422	Screw	
9	M400017	Washer	
10	80116	Nut	
11	430800P	Sheave	Steel; With set screw
12	M400034	Nut	
13	M400022	Nut	
14	430054	Belt	
15	430862P	U-Bolt Clamp Kit	
16	N/A	Partition Reinforcing Plate	Back
17	430867	Jackshaft Assembly	
18	430856	Partition Reinforcing Plate	Front
19	M401327	Key	
20	430104P	Belt	
21	430050P	Pulley Kit	
22	N/A	Drum Idler Spring	
23	M400993	Key	
24	430193	Cylinder Idler Bracket	
25	M400057	Screw	
26	02834	Washer	

N/A = Part no longer available

© Copyright, Alliance Laundry Systems LLC – DO NOT COPY or TRANSMIT

Blower Housing and Fan

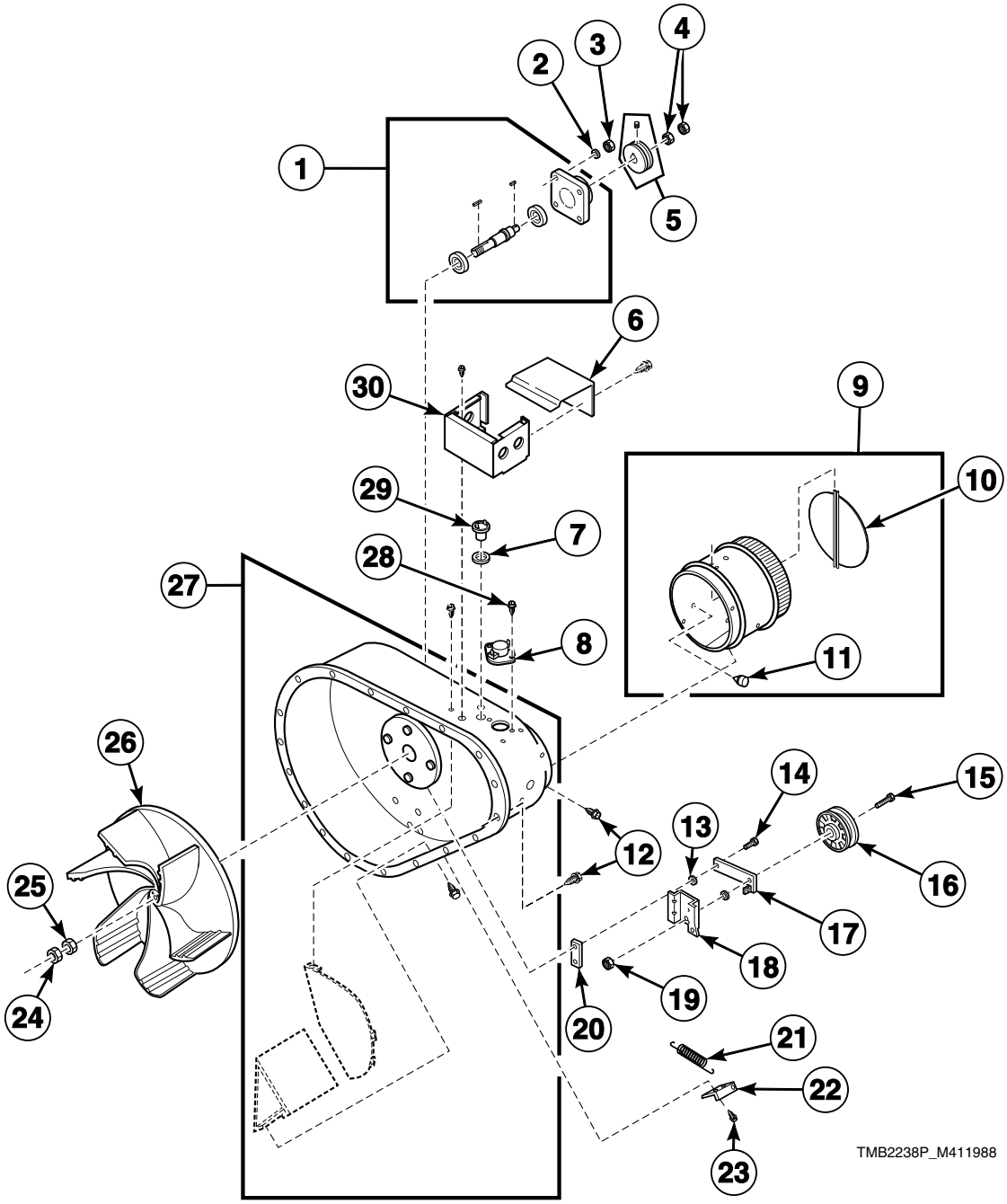

© Copyright, Alliance Laundry Systems LLC – DO NOT COPY or TRANSMIT

Blower Housing and Fan

REF	PART NO.	DESCRIPTION	COMMENTS
	430757	Screw	4 required; Attaches bracket to blower housing
1	430853	Fan Shaft Assembly	
2	02834	Washer	
3	02428	Nut	
4	430875	Nut	
5	N/A	Sheave	
6	N/A	Top and Front Cover	
7	29443	Washer	
8	M406412	Limit Thermostat	
9	430536P	Thimble and Vane Assembly	
10	430534	Vane Assembly	2 required
11	M400795	Bumper	
12	M405188	Screw	
13	430782	Washer	
14	431539	Screw	
15	430648	Screw	
16	430618	Drum Idler Wheel Assembly	
17	430250	Drive Idler Arm	
18	N/A	Idler Pulley Bracket	
19	56156	Nut	
20	N/A	Spacer	
21	430252	Drive Idler Spring	
22	N/A	Idler Spring Tab	
23	27196	Screw	
24	M400034	Nut	
25	M400022	Nut	
26	44127401P	Blower	
27	N/A	Blower Housing Assembly	
28	23962	Screw	
29	M409114	Sensor	
30	430338	Side and Back Cover	

N/A = Part no longer available

© Copyright, Alliance Laundry Systems LLC – DO NOT COPY or TRANSMIT

Motor and Belt Guard

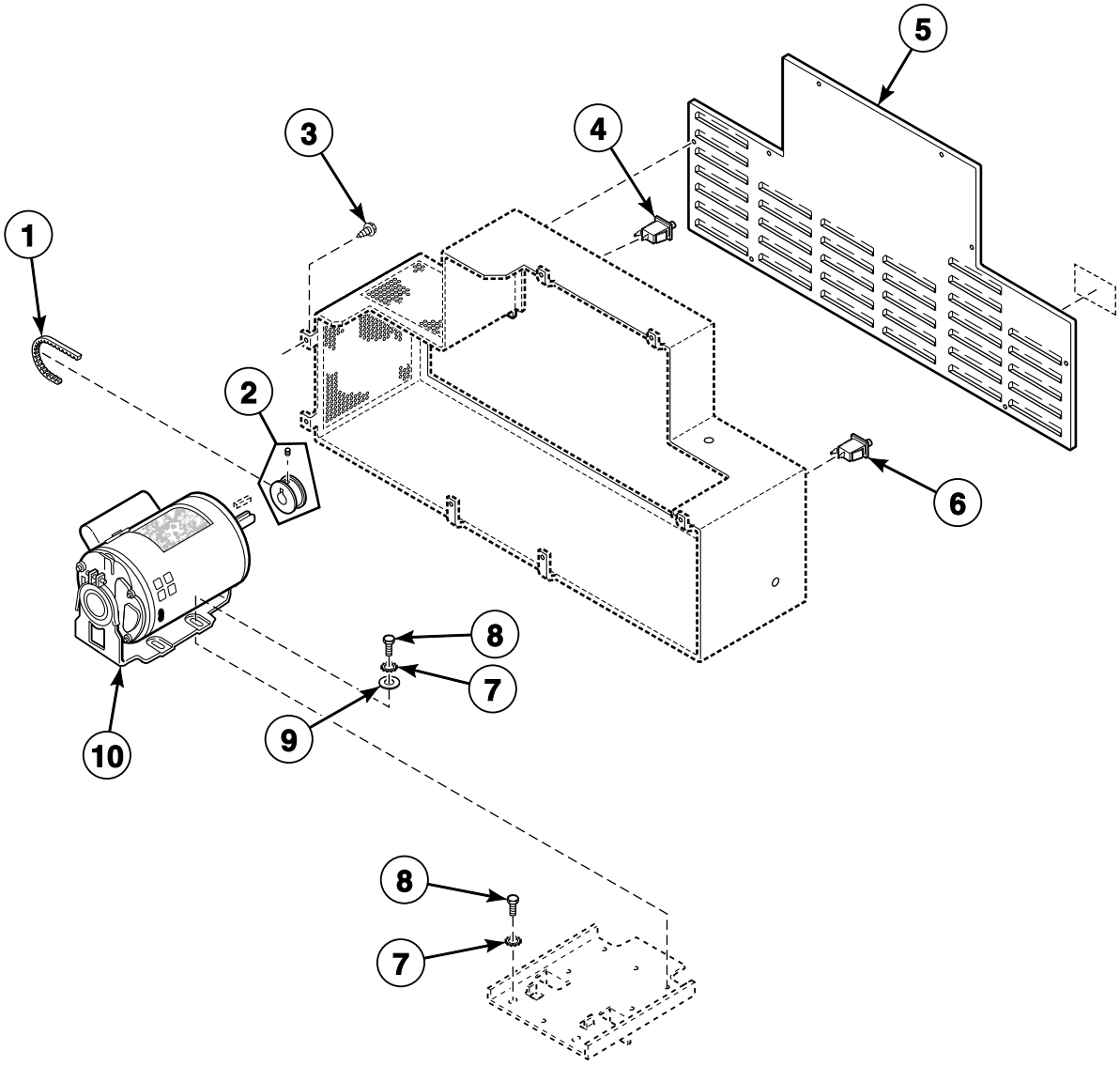

TMB2239P_M411988

© Copyright, Alliance Laundry Systems LLC – DO NOT COPY or TRANSMIT

Motor and Belt Guard

REF	PART NO.	DESCRIPTION	COMMENTS
	M411815	Vent and Thimble Caution Label	
	M410302	Motor Capacitor	
1	430054	Belt	
2	N/A	Sheave	60 Hertz; Includes setscrew
	N/A	Sheave	50 Hertz; Includes setscrew
3	430497	Screw	
4	431159	Switch	Models starting Serial No. DTCK9308000527
5	N/A	Belt Guard	
6	N/A	Belt Guard Switch	Models through Serial No. DTCK9308000528
7	02834	Washer	
8	M400057	Screw	
9	M400080	Washer	
10	431325P	Motor	60 Hertz
	430426	Motor	50 Hertz

N/A = Part no longer available

© Copyright, Alliance Laundry Systems LLC – DO NOT COPY or TRANSMIT

Thermostat and Burner

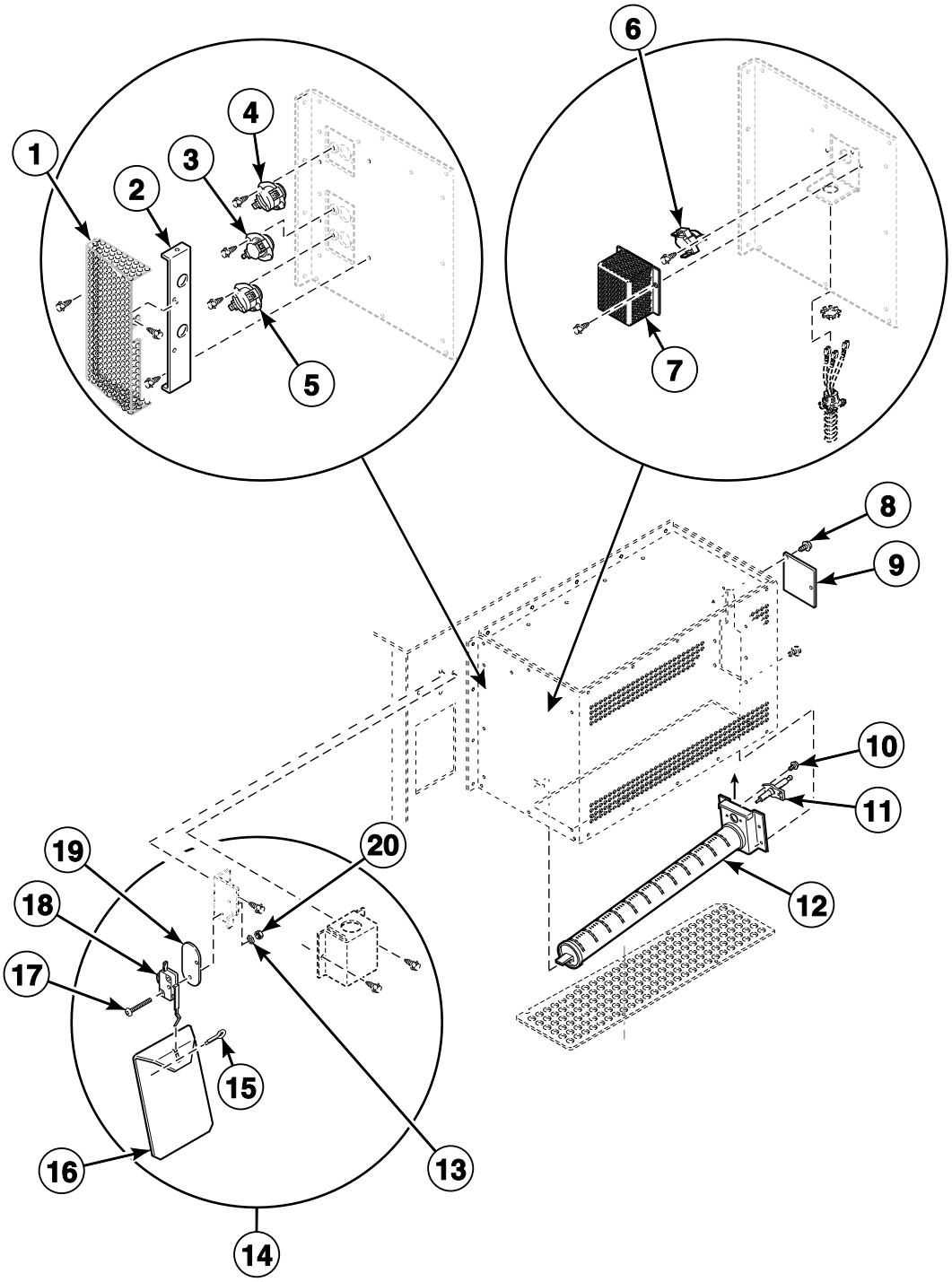

TMB2240P_M411988

© Copyright, Alliance Laundry Systems LLC – DO NOT COPY or TRANSMIT

Thermostat and Burner

REF	PART NO.	DESCRIPTION	COMMENTS
1	N/A	Top Thermostat Cover	Models through Serial No. DTCK9211033714
2	N/A	Front Thermostat Cover	Models through Serial No. DTCK9211033714
3	430729	Step Down Thermostat	Models through Serial No. DTCK9211033714
4	430539P	Reset Thermostat	Models through Serial No. DTCK9211033714
5	430387P	Close Limit Thermostat	Models through Serial No. DTCK9211033714
6	431177	Stove Limit Thermostat	Models starting Serial No. DTCK9211033714
7	M414477	Thermostat Cover	Models starting Serial No. DTCK9211033714
8	430497	Screw	
	431287	Screw	
9	430375	Burner Cover Plate	
10	56693	Screw	
11	430317P	Spark Igniter	
12	N/A	Burner Assembly	
13	51345	Washer	
14	430369P	Airflow Switch Kit	Includes items 15-20
15	02470	Cotter Pin	
16	430372	Airflow Switch Vane	
17	M401938	Screw	
18	431431	Airflow Switch	
19	H96418728	Mounting Insulation	
20	70072901	Nut	

N/A = Part no longer available

© Copyright, Alliance Laundry Systems LLC – DO NOT COPY or TRANSMIT

Gas Valve - Single Input

Models Starting Serial No. DTCK9211033714

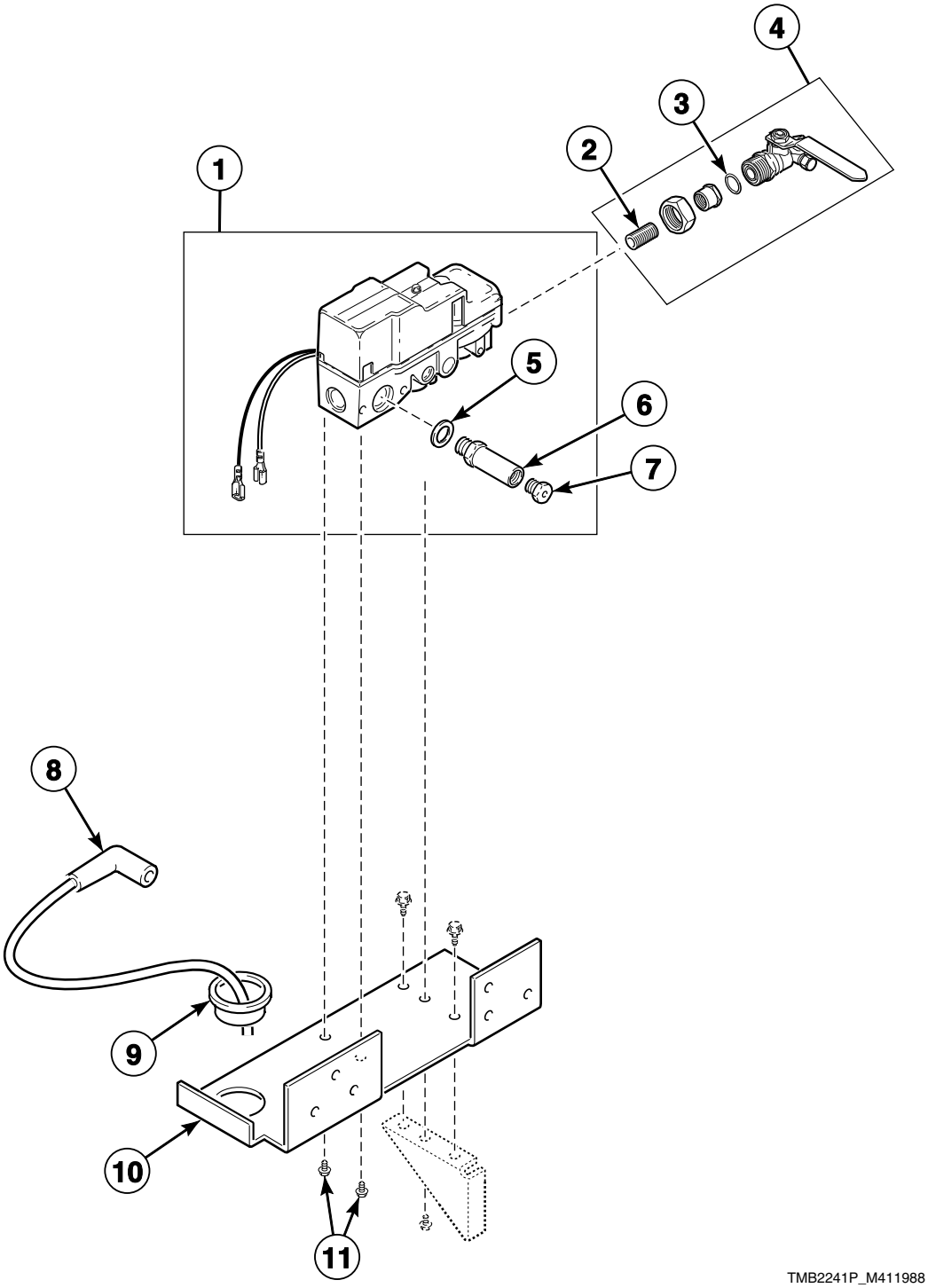

© Copyright, Alliance Laundry Systems LLC – DO NOT COPY or TRANSMIT

Gas Valve - Single Input

REF	PART NO.	DESCRIPTION	COMMENTS
	563P3	Conversion Kit	Natural Gas (N.G.) to Liquid Petroleum Gas (L.P.)
	550P3	Conversion Kit	L.P. to N.G.
1	867P3	N.G. Valve Replacement Kit	N.G.; 60 Hertz
	N/A	Gas Valve Assembly	N.G.; 50 Hertz
	868P3	L.P. Valve Replacement Kit	L.P.; 60 Hertz
	N/A	Gas Valve Assembly	L.P.; 50 Hertz
2	431182P	Shut-Off Valve Kit	Models starting Serial No. DTCK930702934
3	431182A	O-Ring	
4	431182P	Shut-Off Valve Kit	Models starting Serial No. DTCK930702934
5	N/A	Gas Valve Gasket	
6	N/A	Gas Valve Spud	
7	431191	Burner Orifice	N.G.; 0-2,000 feet; Drill no. 24
	431192	Burner Orifice	N.G; 2,001-4,000 feet; Drill no. 26
	430938	Burner Orifice	N.G.; 4,001-6,000 feet; Drill no. 27
	N/A	Burner Orifice	N.G.; 6,001-8,000 feet; Drill no. 28
	N/A	Burner Orifice	N.G.; 8,001-10,000 feet; Drill no. 29
	430938	Burner Orifice	Liquid Natural Gas (L.N.G.); 0-2,000 feet; Drill no. 27
	N/A	Burner Orifice	Town Gas (L.P.); 0-2,000 feet; Drill no. V
	431010	Burner Orifice	L.P.; 0-2,000 feet; 3/32 inch
	N/A	Burner Orifice	L.P.; 2,001-6,000 feet; Drill no. 43
	N/A	Burner Orifice	L.P.; 6,001-8,000 feet; Drill no. 44
	N/A	Burner Orifice	L.P.; 8,001-10,000 feet; Drill no. 46
8	430257	High Voltage Lead	
9	M402542	Snap Bushing	
10	N/A	Gas Valve Bracket	
11	23962	Screw	

N/A = Part no longer available

© Copyright, Alliance Laundry Systems LLC – DO NOT COPY or TRANSMIT

Gas Valve - Dual Input Models Starting Serial No. DTCK0714594ZA Through Serial No. DTCK9211033713

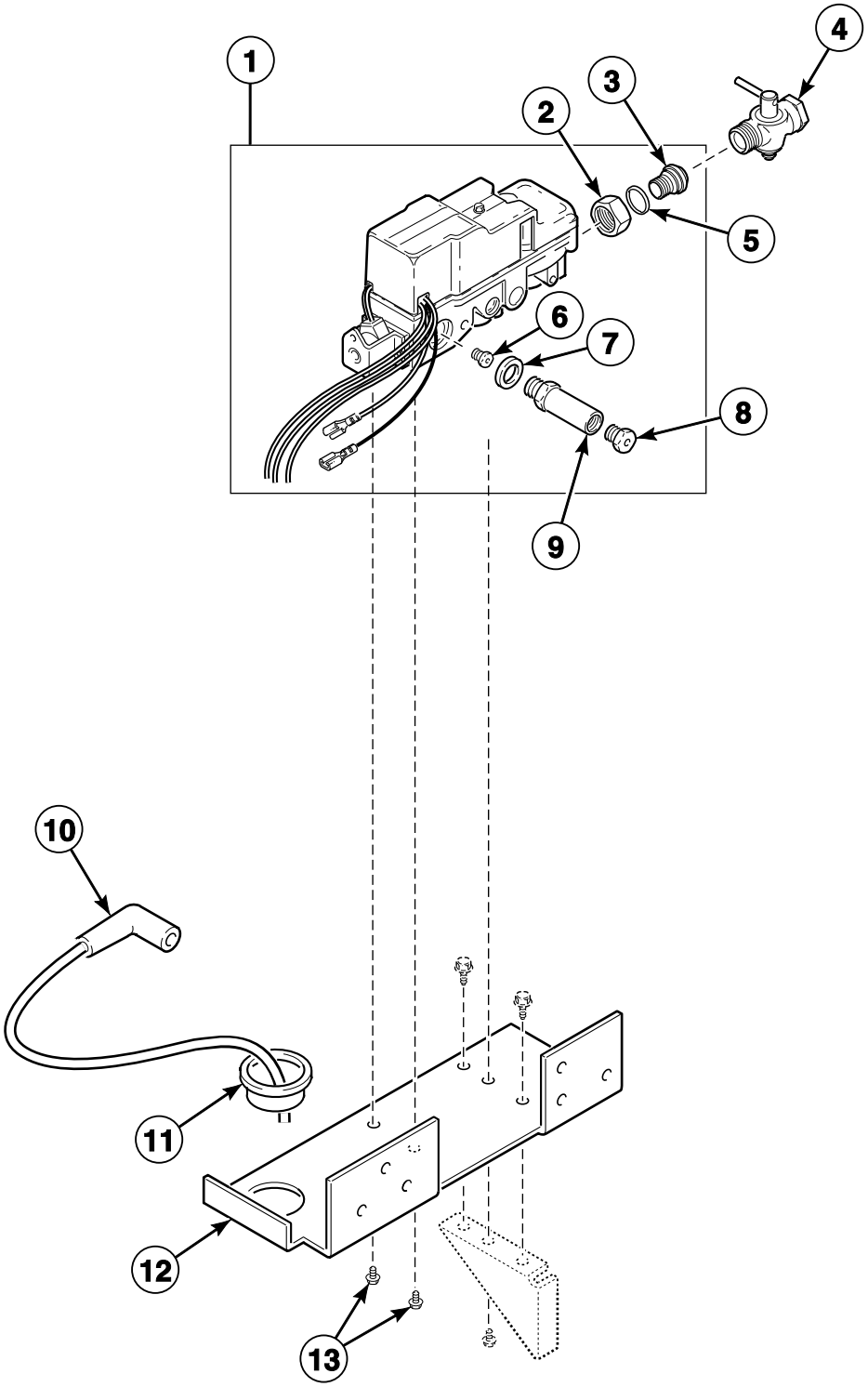

TMB2242P_M411988

© Copyright, Alliance Laundry Systems LLC – DO NOT COPY or TRANSMIT

Gas Valve - Dual Input Models Starting Serial No. DTCK0714594ZA Through Serial No. DTCK9211033713

REF	PART NO.	DESCRIPTION	COMMENTS
	514P3	Conversion Kit	Natural Gas (N.G.) to Liquid Petroleum Gas (L.P.)
1	867P3	N.G. Valve Replacement Kit	N.G.; 60 Hertz
	N/A	Gas Valve Assembly	N.G.; 50 Hertz
	868P3	L.P. Valve Replacement Kit	L.P.; 60 Hertz
	N/A	Gas Valve Assembly	L.P.; 50 Hertz
2	M401549	Nut	Union
3	N/A	Tailpiece	3/8 male NPT
4	431182P	Shut-Off Valve Kit	
5	M400605	Anti-Torque Ring	
6	N/A	Burner Orifice	N.G.; 0-2,000 feet; Drill no. 30
	N/A	Burner Orifice	N.G.; 2,001-4,000 feet; 1/8 inch
	N/A	Burner Orifice	N.G.; 4,001-6,000 feet; Drill no. 31
	N/A	Burner Orifice	N.G.; 6,001-8,000 feet; Drill no. 32
	N/A	Burner Orifice	N.G.; 8,001-10,000 feet; Drill no. 34
	N/A	Burner Orifice	Liquid Natural Gas (L.N.G.); 0-2,000 feet
	430893	Burner Orifice	L.P.; 0-2,000 feet; Drill no. 45
	430655	Burner Orifice	L.P.; 2,001-4,000 feet; Drill no. 47
	N/A	Burner Orifice	L.P.; 4,001-8,000 feet; Drill no. 48
	N/A	Burner Orifice	L.P.; 8,001-10,000 feet; Drill no. 49
7	N/A	Gas Valve Gasket	
8	430935	Burner Orifice	N.G.; 2,001-4,000 feet; Drill no. 21
	N/A	Burner Orifice	N.G.; 4,001-6,000 feet; Drill no. 22
	N/A	Burner Orifice	N.G.; 6,001-8,000 feet; Drill no. 25
	430938	Burner Orifice	N.G.; 8,001-10,000 feet; Drill no. 27
	N/A	Burner Orifice	L.N.G.; 0-2,000 feet; Drill no. 22
	N/A	Burner Orifice	Town Gas; L.P.; 0-2,000 feet; Drill no. V
	431010	Burner Orifice	L.P.; 0-2,000 feet; 3/32 inch
	N/A	Burner Orifice	L.P.; 2,001-6,000 feet; Drill no. 43
	N/A	Burner Orifice	L.P.; 6,001-8,000 feet; Drill no. 44
	N/A	Burner Orifice	L.P.; 8,001-10,000 feet; Drill no. 45
	N/A	Burner Orifice	Town Gas; 0-2,000 feet; Drill no. A
9	N/A	Gas Valve Spud	
10	430257	High Voltage Lead	
11	M402542	Snap Bushing	
12	N/A	Gas Valve Bracket	
13	23962	Screw	

N/A = Part no longer available

© Copyright, Alliance Laundry Systems LLC – DO NOT COPY or TRANSMIT

Gas Valve - Dual Input Models Through Serial No. DTCK0714594ZA

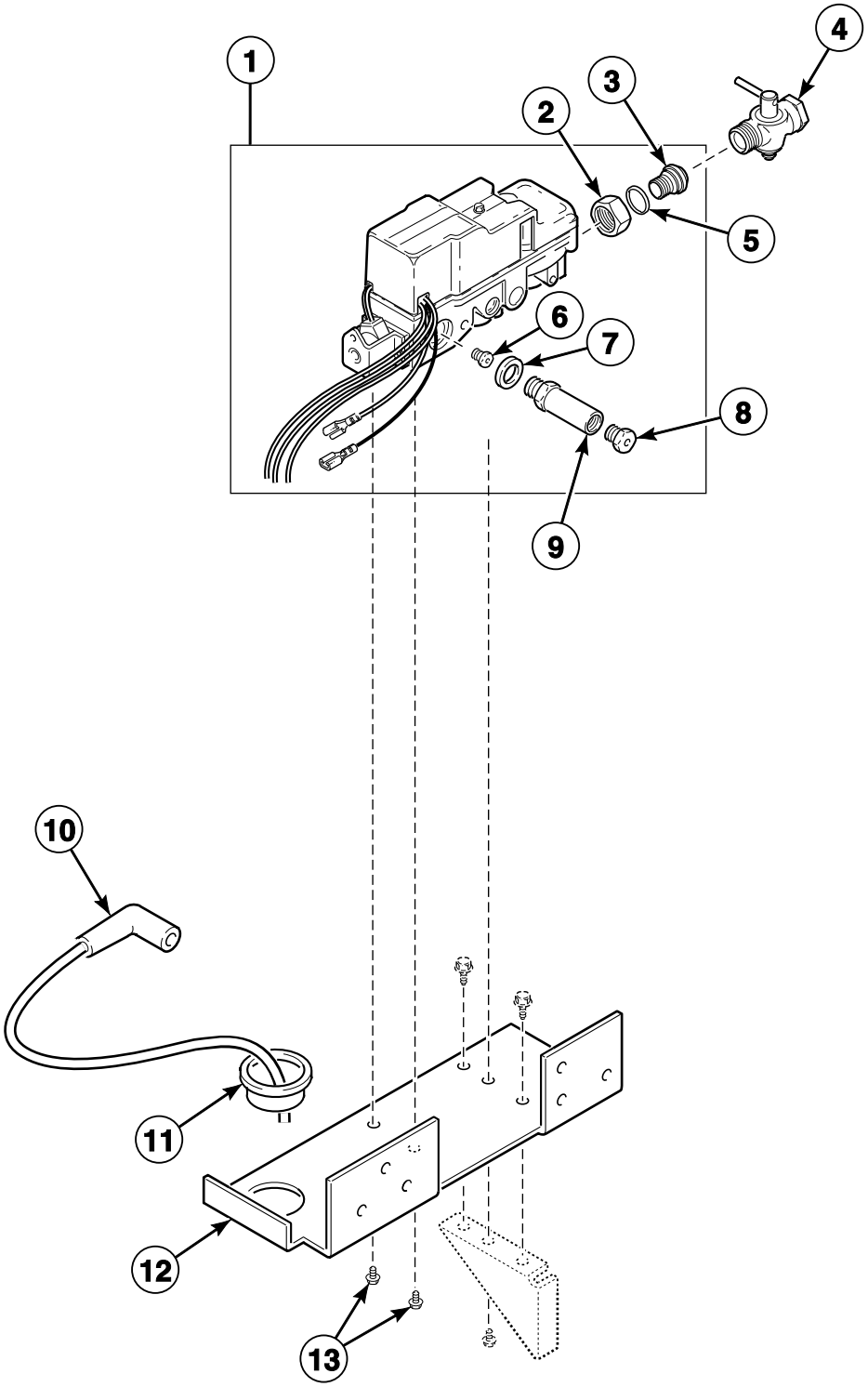

TMB2242P_M411988

© Copyright, Alliance Laundry Systems LLC – DO NOT COPY or TRANSMIT

Gas Valve - Dual Input Models Through Serial No. DTCK0714594ZA

REF	PART NO.	DESCRIPTION	COMMENTS
	474P3	Conversion Kit	Natural Gas (N.G.) to Liquid Petroleum Gas (L.P.)
1	867P3	N.G. Valve Replacement Kit	N.G.; 60 Hertz
	N/A	Gas Valve Assembly	N.G.; 50 Hertz
	868P3	L.P. Valve Replacement Kit	L.P.; 60 Hertz
	N/A	Gas Valve Assembly	L.P.; 50 Hertz
2	M401549	Nut	Union
3	N/A	Tailpiece	3/8 male NPT
4	431182P	Shut-Off Valve Kit	
5	M400605	Anti-Torque Ring	
6	N/A	Burner Orifice	N.G.; 0-2,000 feet; 1/8 inch
	N/A	Burner Orifice	N.G.; 2,001-4,000 feet; Drill no. 31
	N/A	Burner Orifice	N.G.; 4,001-6,000 feet; Drill no. 32
	N/A	Burner Orifice	N.G.; 6,001-8,000 feet; Drill no. 33
	N/A	Burner Orifice	N.G.; 8,001-10,000 feet; Drill no. 34
	430655	Burner Orifice	L.P.; 0-2,000 feet; Drill no. 47
	N/A	Burner Orifice	L.P.; 2,001-4,000 feet; Drill no. 48
	N/A	Burner Orifice	L.P.; 4,001-6,000 feet; Drill no. 49
	N/A	Burner Orifice	L.P.; 6,001-8,000 feet; Drill no. 50
	N/A	Burner Orifice	L.P.; 8,001-10,000 feet; Drill no. 51
7	N/A	Gas Valve Spud	
8	430773	Burner Orifice	N.G.; 0-2,000 feet; Drill no. 13
	N/A	Burner Orifice	N.G.; 2,001-4,000 feet; Drill no. 16
	N/A	Burner Orifice	N.G.; 4,001-6,000 feet; Drill no. 17
	430933	Burner Orifice	N.G.; 6,001-8,000 feet; Drill no. 18
	N/A	Burner Orifice	N.G.; 8,001-10,000 feet; Drill no. 20
	430736	Burner Orifice	L.P.; 0-2,000 feet; Drill no. 37
	N/A	Burner Orifice	L.P.; 2,001-4,000 feet; Drill no. 39
	N/A	Burner Orifice	L.P.; 4,001-6,000 feet; Drill no. 41
	N/A	Burner Orifice	L.P.; 6,001-8,000 feet; Drill no. 42
	N/A	Burner Orifice	L.P.; 8,001-10,000 feet; Drill no. 43
9	N/A	Gas Valve Gasket	
10	430257	High Voltage Lead	
11	M402542	Snap Bushing	
12	N/A	Gas Valve Bracket	
13	23962	Screw	

N/A = Part no longer available

© Copyright, Alliance Laundry Systems LLC – DO NOT COPY or TRANSMIT

Gas Valve Coils

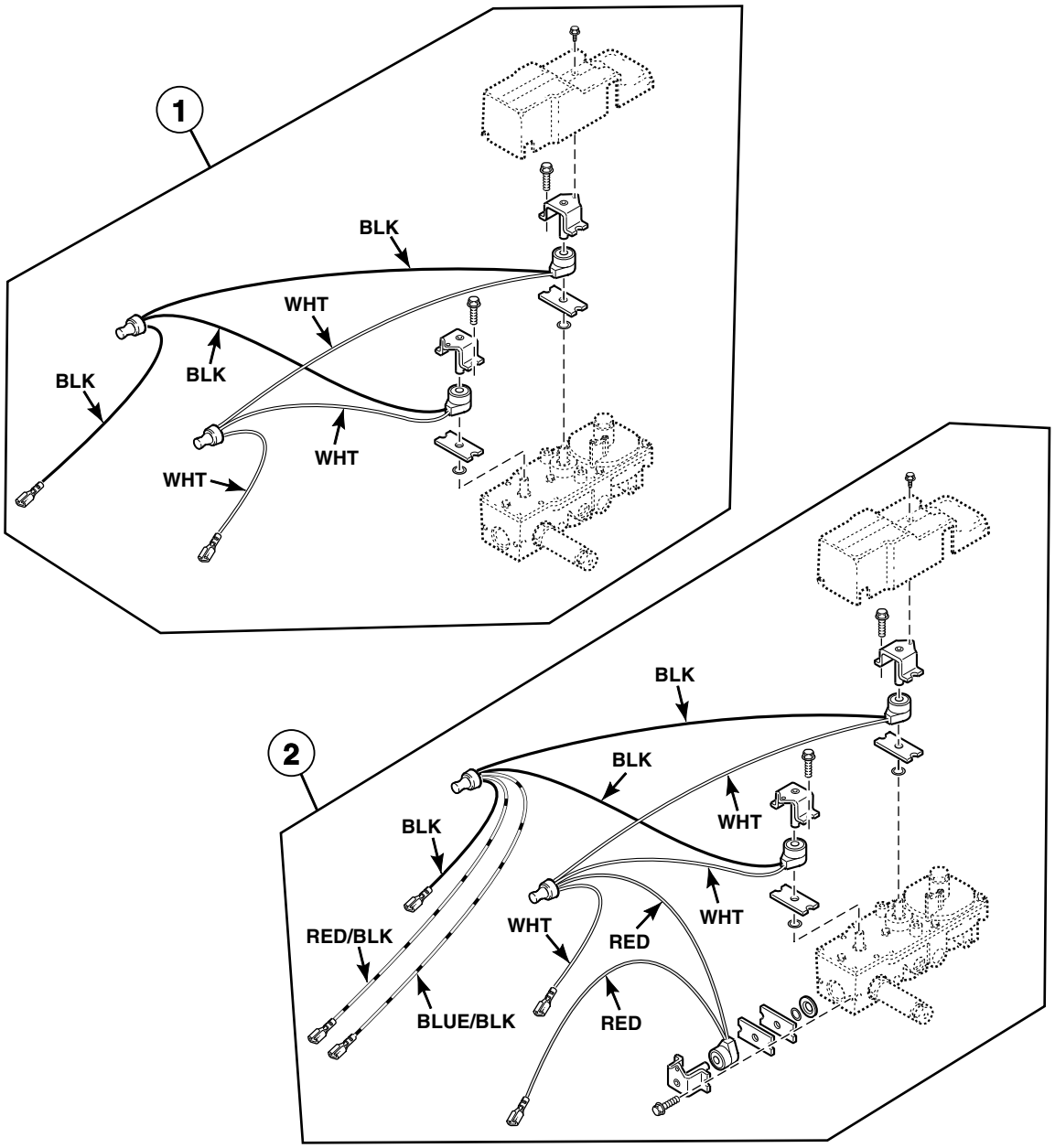

TMB2243P_M411988

© Copyright, Alliance Laundry Systems LLC – DO NOT COPY or TRANSMIT

Gas Valve Coils

REF	PART NO.	DESCRIPTION	COMMENTS
1	M409253P	Instant Electronic Ignition Valve Coil Kit	Model starting Serial No. DTCK9211033714
2	430690	Coil and Harness Kit	60 Hertz; Models through Serial No. DTCK9211033715
	N/A	Coil and Harness Kit	50 Hertz; Models through Serial No. DTCK9211033715

N/A = Part no longer available

© Copyright, Alliance Laundry Systems LLC – DO NOT COPY or TRANSMIT

Junction Box - 120 or 208-240 Volt/60 Hertz

Models Through Serial No. DTCK9211033714

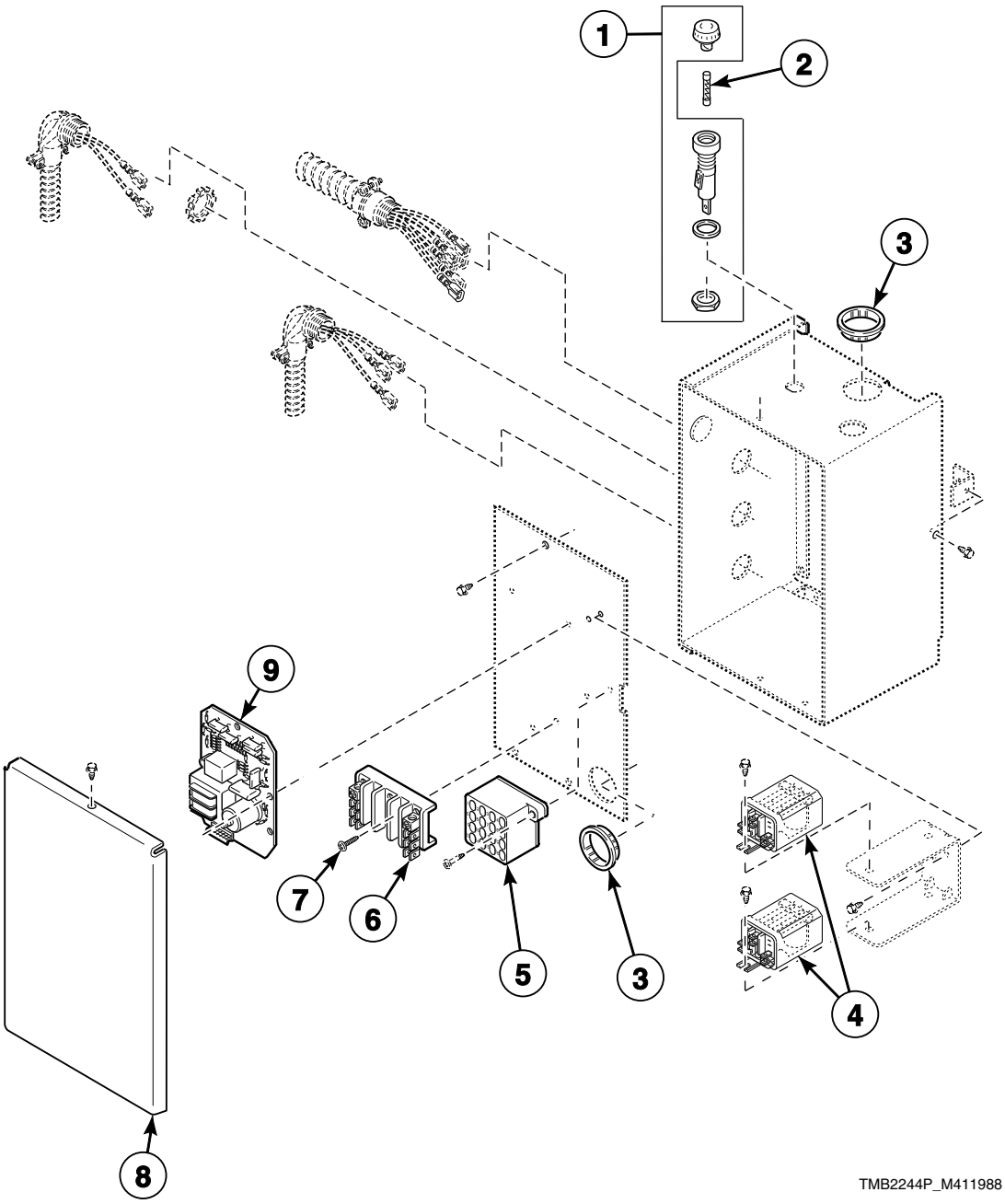

© Copyright, Alliance Laundry Systems LLC – DO NOT COPY or TRANSMIT

Junction Box - 120 or 208-240 Volt/60 Hertz

REF	PART NO.	DESCRIPTION	COMMENTS
	430223	Instant Electronic Ignition Wire Harness Assembly	Models through Serial No. DTCK9312064705 **or** DTCK9401011756
	431053P	Main Wire Harness Assembly	208-240 Volt/60 Hertz; Lower
	430966P	Main Harness Assembly	120 Volt/50 or 60 Hertz; Upper; Models starting Serial No. DTCK0728885ZH through DTCK9211033713
1	91024P	Fuse Receptacle	
2	M409997	Fuse	6 Amp; 250 Volt
3	M402542	Snap Bushing	
4	N/A	Latch Relay	
5	N/A	Jumper Terminal Block	
6	430641	Terminal Block	120 Volt
	430642	Terminal Block	240 Volt
7	51778	Screw	
8	430554	Junction Box Cover	
9	M406789P	Ignition Control	

N/A = Part no longer available

© Copyright, Alliance Laundry Systems LLC – DO NOT COPY or TRANSMIT

Junction Box - 240 Volt/50 Hertz

Models Through Serial No. DTCK9211035714

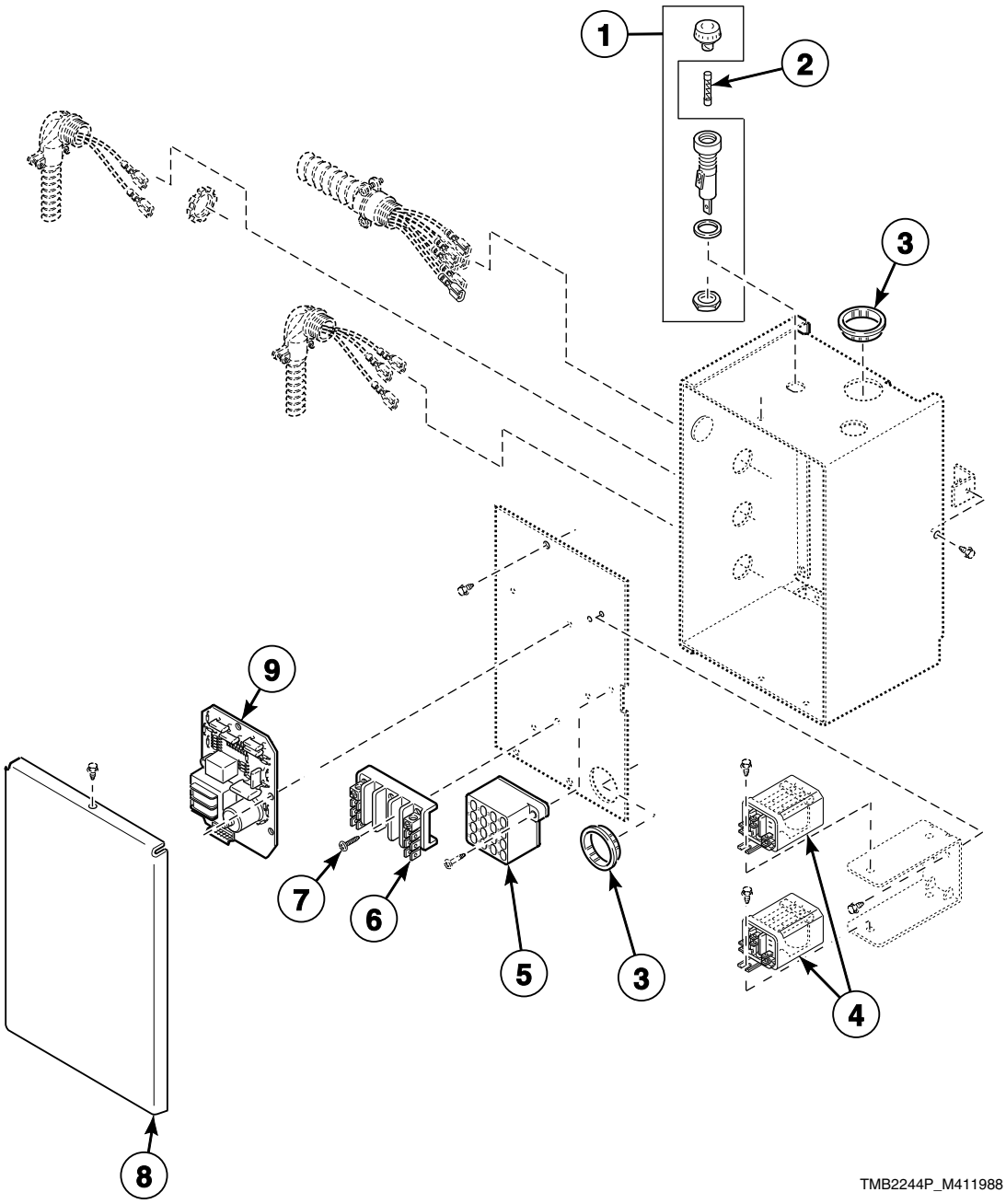

© Copyright, Alliance Laundry Systems LLC – DO NOT COPY or TRANSMIT

Junction Box - 240 Volt/50 Hertz

REF	PART NO.	DESCRIPTION	COMMENTS
	430223	Instant Electronic Ignition Wire Harness Assembly	Models through Serial No. DTCK9312064705 **or** DTCK9401011756
	430746	Relay	Isolation; 240 Volt
1	91024P	Fuse Receptacle	
2	M409997	Fuse	6 Amp; 250 Volt
3	M402542	Snap Bushing	
4	N/A	Latch Relay	
5	N/A	Jumper Terminal Block	
6	430641	Terminal Block	120 Volt
7	51778	Screw	
8	430554	Junction Box Cover	
9	M406789P	Ignition Control	

N/A = Part no longer available

© Copyright, Alliance Laundry Systems LLC – DO NOT COPY or TRANSMIT

Junction Box - 120 or 208-240 Volt/60 Hertz

Models Starting Serial No. DTCK9211033715

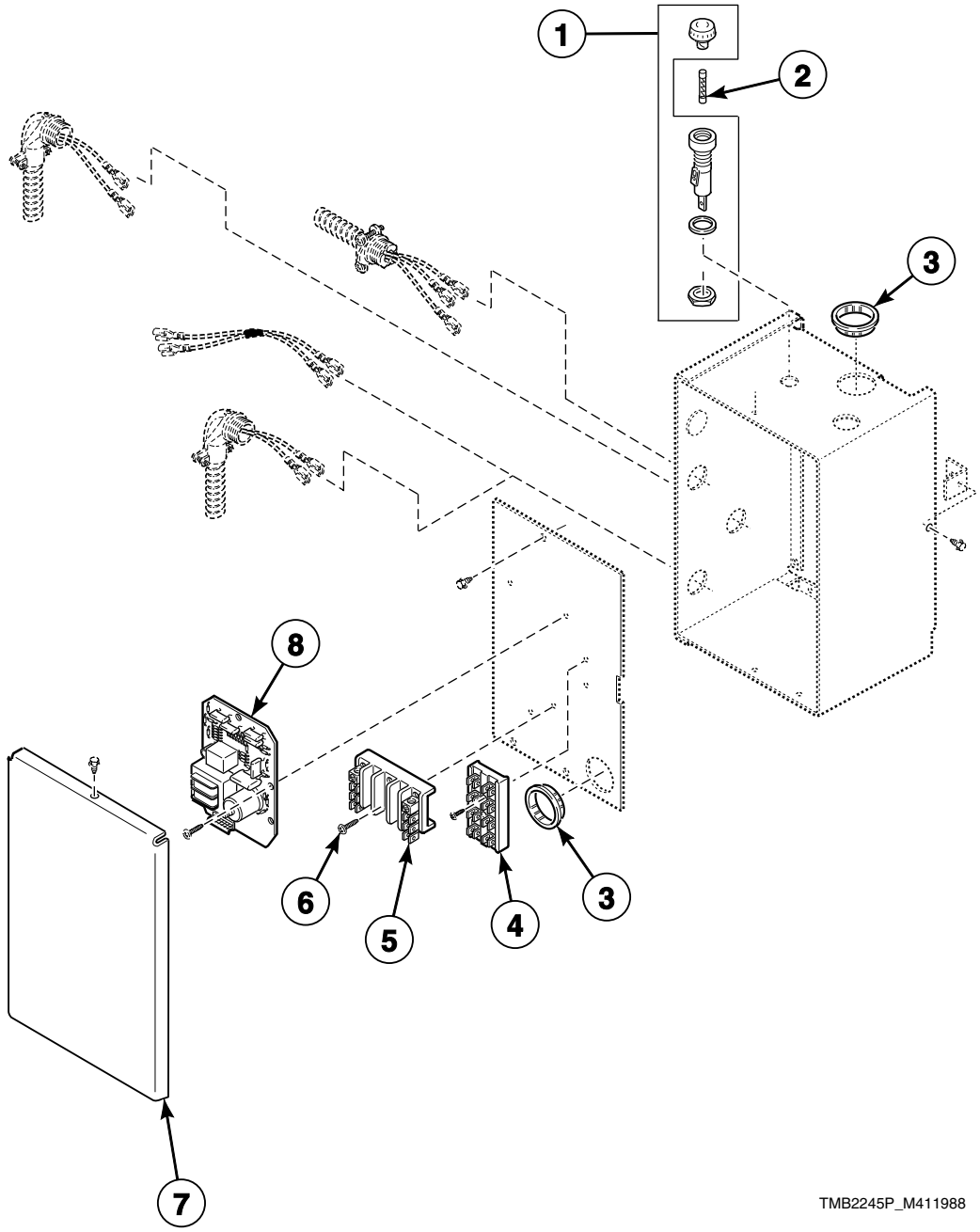

© Copyright, Alliance Laundry Systems LLC – DO NOT COPY or TRANSMIT

Junction Box - 120 or 208-240 Volt/60 Hertz

REF	PART NO.	DESCRIPTION	COMMENTS
	430223	Instant Electronic Ignition Wire Harness Assembly	Models through Serial No. DTCK9312064705 **or** DTCK9401011756
1	91024P	Fuse Receptacle	Located in upper junction box only
2	M409997	Fuse	6 Amp; 250 Volt; Located in upper junction box only
3	M402542	Snap Bushing	
4	N/A	Jumper Terminal Block	
5	430641	Terminal Block	120 Volt
	430642	Terminal Block	240 Volt
6	51778	Screw	
7	430554	Junction Box Cover	
8	M406789P	Ignition Control	

N/A = Part no longer available

© Copyright, Alliance Laundry Systems LLC – DO NOT COPY or TRANSMIT

Junction Box - 240 Volt/50 Hertz

Models Starting Serial No. DTCK9211033715

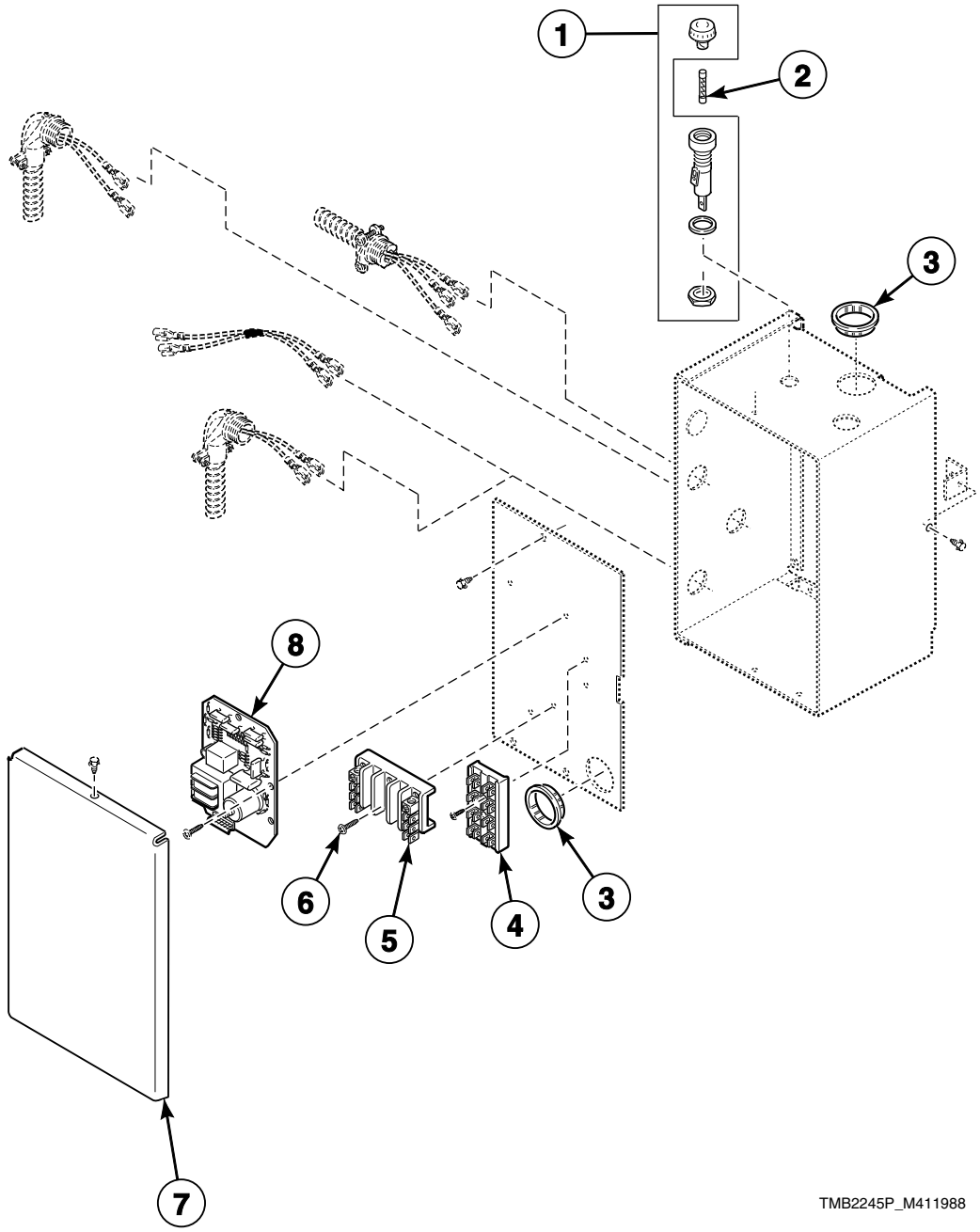

© Copyright, Alliance Laundry Systems LLC – DO NOT COPY or TRANSMIT

Junction Box - 240 Volt/50 Hertz

REF	PART NO.	DESCRIPTION	COMMENTS
	430223	Instant Electronic Ignition Wire Harness Assembly	Models through Serial No. DTCK9312064705 **or** DTCK9401011756
	430746	Relay	Isolation; 240 Volt
1	91024P	Fuse Receptacle	Located in upper junction box only
2	430836	Fuse	3/4 Amp; 250 Volt; Located in upper junction box only
3	M402542	Snap Bushing	
4	N/A	Jumper Terminal Block	
5	430641	Terminal Block	120 Volt
6	51778	Screw	
7	430554	Junction Box Cover	
8	M406789P	Ignition Control	

N/A = Part no longer available

© Copyright, Alliance Laundry Systems LLC – DO NOT COPY or TRANSMIT

Contactor Box

CE Models
230 Volt/50 Hertz/1 Phase

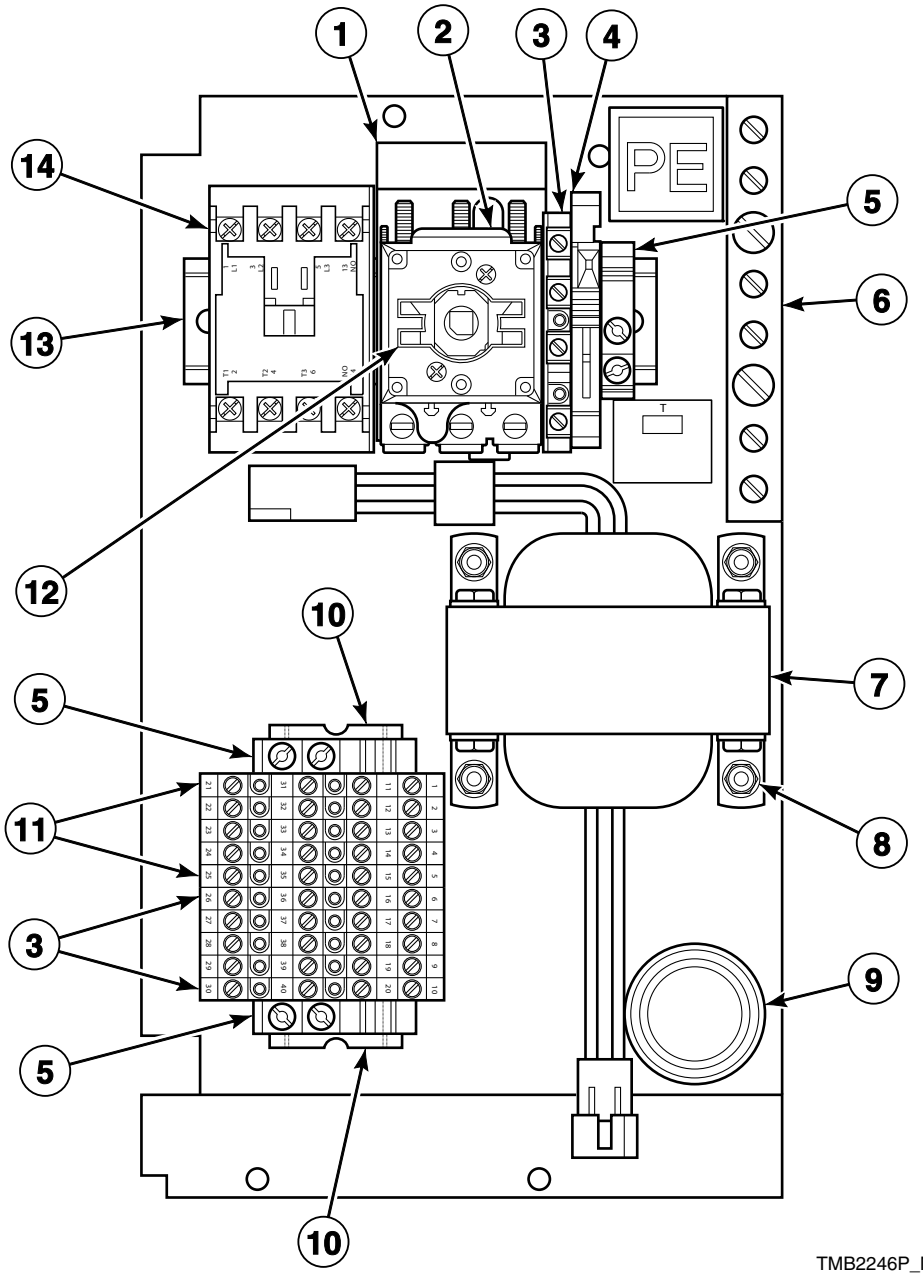

TMB2246P_M411988

© Copyright, Alliance Laundry Systems LLC – DO NOT COPY or TRANSMIT

Contactor Box

REF	PART NO.	DESCRIPTION	COMMENTS
	M412688	Nut	
	502593	Fuse	.4 Amp
	M412633	End Barrier	
1	M412366	Finger Guard	Upper unit only
2	M412187P	Mounting Switch Base	Upper unit only; Disconnect
3	M412632	Terminal Block	1 circuit
4	M412537	Terminal Block	
5	70121001	End Stop	230 Volt
6	M412656	Ground Buss Assembly	
7	M412477P	Transformer	230 Volt
8	51780	Screw	
9	M402542	Snap Bushing	
10	M412692	Din Rail	88.9 mm
11	M412631	Terminal Block	2 circuit
12	N/A	Modified Extension	
13	N/A	Din Rail	127 mm
14	70323701P	Contactor	Motor; 9 Amp

N/A = Part no longer available

© Copyright, Alliance Laundry Systems LLC – DO NOT COPY or TRANSMIT

Stickers and Labels - Front of Machine

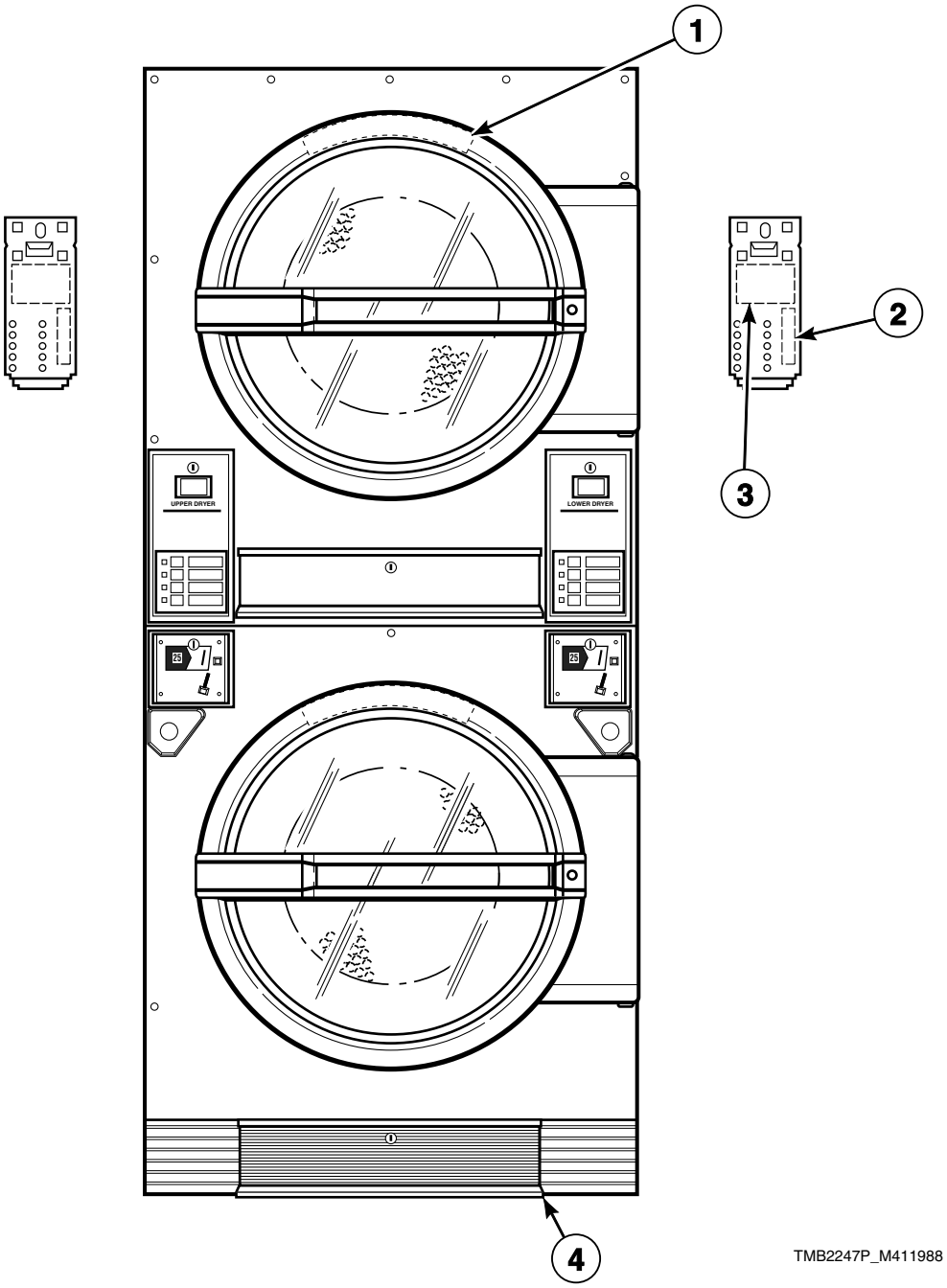

© Copyright, Alliance Laundry Systems LLC – DO NOT COPY or TRANSMIT

Stickers and Labels - Front of Machine

REF	PART NO.	DESCRIPTION	COMMENTS
1	M410892	Warning Label	Located on front panel behind door
2	N/A	Microprocessor Display Sticker	Located on back of micro door
3	N/A	Microprocessor Programming Label	Located on back of micro door
4	500316	Warning Label	Located under lint drawer

N/A = Part no longer available

© Copyright, Alliance Laundry Systems LLC – DO NOT COPY or TRANSMIT

Stickers and Labels - Rear of Machine

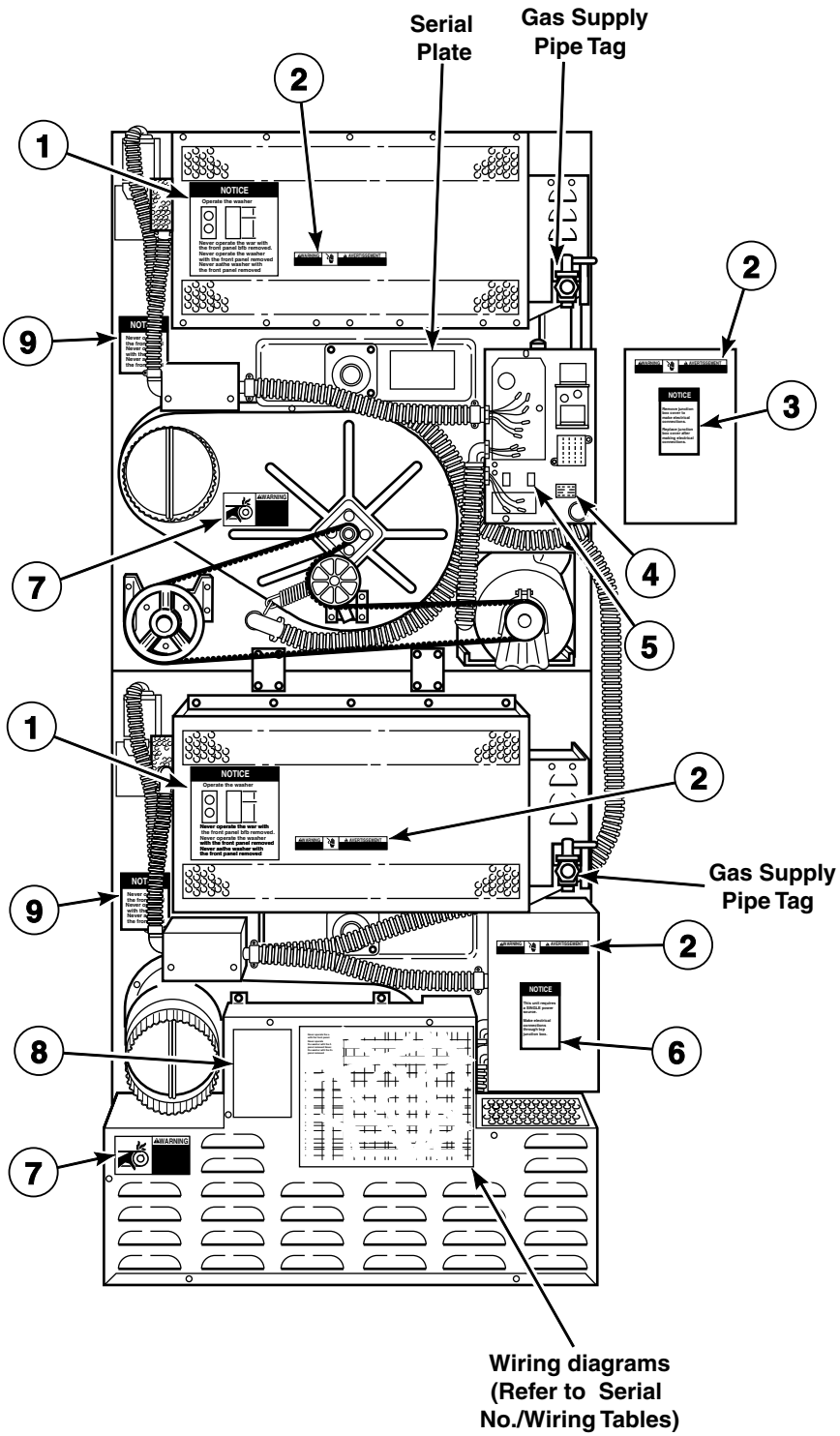

TMB2248P_M411988

© Copyright, Alliance Laundry Systems LLC – DO NOT COPY or TRANSMIT

Stickers and Labels - Rear of Machine

REF	PART NO.	DESCRIPTION	COMMENTS
1	N/A	Installation Notice Sticker	
2	500316	Warning Label	Dual language
3	N/A	Junction Box Notice Sticker	
4	M403047	Secure Ground Label	
5	N/A	Wire Marker	
6	N/A	Power Source Notice Sticker	
7	N/A	Belt Warning Sticker	
8	M411815	Vent and Thimble Caution Label	
9	N/A	Thimble Notice Label	

N/A = Part no longer available

© Copyright, Alliance Laundry Systems LLC – DO NOT COPY or TRANSMIT

Notes

© Copyright, Alliance Laundry Systems LLC – DO NOT COPY or TRANSMIT

Parts Index

A

Actuator Switch Block
431273 21

Adhesive
430821 23

Airflow Switch
431431 33

Airflow Switch Kit
430369P 33

Airflow Switch Vane
430372 33

Anti-Torque Ring
M400605 ..... 37, 39

B

Belt
430054 ..... 25, 27, 31
430104P 25, 27

Blind Rivet
430489 ..... 13, 21

Blower
44127401P 29

Bracket
431361 23

Bumper
M400795 29

Burner Cover Plate
430375 33

Burner Orifice
430655 ..... 37, 39
430736 39
430773 39
430893 37
430933 39
430935 37
430938 ..... 35, 37
431010 ..... 35, 37
431191 35
431192 35

C

Close Limit Thermostat
430387P 33

Coil and Harness Kit
430690 41

Coin Chute
430228 13

Coin Drawer Assembly
430977* 15
430987* 15

Coin Drop
430609 5
431037 7
431126 ..... 5, 15
44085402 7

Coin Drop Key
430664 ..... 5, 7, 11, 21

Coin Drop Kit
431623P 5

Coin Drop Switch
70286101P 5

Coin Vault Shadow Box
430548 ..... 13, 15

Contactor
70323701P 51

Control Panel Overlay
70379901 5
70380001 5
70380101 5
70380201 5

Conversion Kit
474P3 39
514P3 37
550P3 35
563P3 35

Cotter Pin
02470 33

Cylinder and Trunnion Assembly
430580P 23

Cylinder Assembly
430929P 23

Cylinder Bearing Stud Plate Assembly
430352 23

Cylinder Guide Tool
263P4 23

Cylinder Idler Arm
430263 ..... 25, 27

Cylinder Idler Bracket
430193 ..... 25, 27

D

Din Rail
M412692 51

Door Assembly
M410887 19
430475 19
430476 19

Door Glass
M400784P 19
70133601P 19

Door Glass Seal Kit
70211901P 19

Door Graphics
430902 11
430904 11

Door Handle
430117 19
430459 19
44057701 19

Door Hinge Assembly
M402714* 19

Door Latch
M401223 ..... 13, 15, 19

N/A items do not appear in index.

© Copyright, Alliance Laundry Systems LLC – DO NOT COPY or TRANSMIT

Door Ring Gasket
M406129 19
Door Switch
M406103 ..... 17, 19
Door Switch Bracket
431118 17
Drive Idler Arm
430250 29
Drive Idler Spring
430252 29
Drum Idler Wheel Assembly
430618 29
430619 ..... 25, 27

E

End Barrier
M412633 51
End Stop
70121001 51

F

Fan Shaft Assembly
430853 29
Felt Pad
M402144 23
Finger Guard
M412366 51
Front Cylinder Seal Strap
430845P 23
Front Panel Assembly
431323LP 13
Front Seal Kit
430844P 23
Fuse
M409997 ..... 43, 45, 47
430836 49
502593 51
Fuse Receptacle
91024P 43, 45, 47, 49

G

Ground Buss Assembly
M412656 51

H

High Voltage Lead
430257 ..... 35, 37, 39
Hinge Assembly
M400514 19
Hinge Bracket
431000* 13, 15, 19
431044 ..... 13, 15, 19
Hinge Pin
M400653 19

I

Ignition Control
M406789P 43, 45, 47, 49
Instant Electronic Ignition Valve Coil Kit
M409253P 41
Instant Electronic Ignition Wire Harness Assembly
430223 ..... 43, 45, 47, 49
431053P 43

J

Jackshaft Assembly
430867 27
Junction Box Cover
430554 ..... 43, 45, 47, 49

K

Key
M400993 27
M401327 27
Kickplate Extension
431001 21

L

Limit Thermostat
M406412 29
Lint Compartment Label
430527 21
Lint Drawer Assembly
430490 21
Lint Drawer Lock Plate
430381 23
Lint Drawer Seal
430638P 13, 15, 21
430871 21
Lint Screen Frame Assembly
430482 21
431215 21
Lock and Key
430429P 21
Lock, Key and Nut Kit
44089301P 5, 11, 21
44089302P 5, 11, 21
L.P. Valve Replacement Kit
868P3 ..... 35, 37, 39

M

Main Harness Assembly
430966P 43
Microprocessor Door Lock
430832P 11
Microprocessor Wire Harness Kit
430330P 11

N/A items do not appear in index.

© Copyright, Alliance Laundry Systems LLC – DO NOT COPY or TRANSMIT

Motor
430426 31
431325P 31
Motor Capacitor
M410302 31
Mounting Insulation
H96418728 33
Mounting Switch Base
M412187P 51

N

Nut
F430264 23
M400022 ..... 23, 27, 29
M400034 ..... 23, 27, 29
M401549 ..... 37, 39
M401930 ..... 9, 23
M412688 51
M414215 19
Q6163 19
02428 ..... 23, 29
20275 9
23951 ..... 15, 19
430576 23
430875 29
52566 ..... 25, 27
56156 ..... 25, 27, 29
70072901 33
80116 27
N.G. Valve Replacement Kit
867P3 ..... 35, 37, 39

O

O-Ring
431182A 35
Overlay
70379902 7
70380002 7
70380102 7
70380202 7

P

Panel Key
M401680 21
Partition Reinforcing Plate
430856 27
Pop Rivet
M400003 ..... 13, 15, 19, 23
M410762 ..... 13, 15, 19
Pulley Kit
430050P 25, 27

R

Reject Button
81312J 5, 7
Relay
430746 ..... 45, 49
Replacement Door Handle Kit
70133501P 19
Reset Thermostat
430539P 33
Retaining Ring
70061 23
Rib Assembly
430099 23
Roller Bearing Assembly
430019 23
Roller Shaft
431315 23
Roller Shaft Retainer
431314 23

S

Safety Wire Harness Assembly
430843 15
Screw
M400044 19
M400057 ..... 25, 27, 31
M400063 17
M400661 19
M401938 33
M402585 19
M405188 29
M409385 19
02422 ..... 25, 27
23962 ..... 29, 35, 37, 39
27196 ..... 17, 29
27220 25
28193 17
430497 ..... 19, 31, 33
430648 ..... 25, 27, 29
430756 19
430757 ..... 21, 29
431287 33
431539 ..... 25, 27, 29
502535 23
51778 ..... 43, 45, 47, 49
51780 ..... 21, 51
56693 33
Seal Kit
430105P 23
Seal Strap
430355P 23
Secure Ground Label
M403047 55
Sensor
M409114 29
Shadow Box Clip
M400972 ..... 13, 15
Sheave
430800P 25, 27
Shut-Off Valve Kit
431182P 35, 37, 39
Side and Back Cover
430338 29
Snap Bushing
M402542 ..... 17, 35, 37, 39, 43, 45, 47, 49, 51
Spacer
M401402 23

N/A items do not appear in index.

© Copyright, Alliance Laundry Systems LLC – DO NOT COPY or TRANSMIT

Spark Igniter
430317P 33
Spring
430954 23
52310 23
Step Down Thermostat
430729 33
Stove Limit Thermostat
431177 33
Support Housing Bearing Assembly
430260P 23
Sweep Sheet Kit
430884P 23
Switch
431159 ..... 21, 31
Switch Plate
81637 9

T

Terminal Block
M412537 51
M412631 51
M412632 51
430641 ..... 43, 45, 47, 49
430642 ..... 43, 47
Thermostat Cover
M414477 33
Thimble and Vane Assembly
430536P 29
Transformer
M412477P 51
Trunnion Assembly
430219 23

U

U-Bolt Clamp Kit
430862P 27

V

Vane Assembly
430534 29
Vent and Thimble Caution Label
M411815 ..... 31, 55

W

Warning Label
M410892 53
500316 ..... 53, 55
Washer
M400017 ..... 25, 27
M400080 31
M400675 19
M400991 23
M401947 23
02834 ..... 23, 25, 27, 29, 31
03815 19
26509 25
29443 29
430782 ..... 25, 27, 29
51345 33

N/A items do not appear in index.

© Copyright, Alliance Laundry Systems LLC – DO NOT COPY or TRANSMIT